wieland

revos

SOLID **CONNECTION**

Industrial multipole connectors for
use in especially tough environment conditions.

HELLO
WIELAND ELECTRIC

Over 100 years of safe connections.

As the inventor of safe electrical connection technology,
we are committed to individual and safe system solutions.

Together with our broad product portfolio we offer comprehensive services for industry applications as well as building installation and lighting technology. This experience amounts to Wieland being the global market leader for pluggable, electrical installations in commercial buildings and a dependable partner for machine safety. Our solutions are designed for the secure safety of your team, ensuring that integration of our system is fast and easy while saving time and cost. Thanks to our modular solutions your requirements can be satisfied in a fast, flexible and fail-safe way.

We operate worldwide with subsidiaries, production facilities and sales partners and have an excellent global network. Our specialist teams are supporting customers and projects across the globe - personally and individually. Our competences in engineering, production and logistics processes are interlinked with each other for maximum efficiency.

We look forward to exploring all partnership opportunities with you.

1910
founded in Bamberg

1600 +
employees worldwide

6
production sites

70 +
countries worldwide

OUR **SECTOR KNOWLEDGE.**

We have developed special industry knowledge in a wide variety of specialized fields. This forms the basis of our successful solutions.

- Machine and system construction
- Building installation
- Heating, ventilation and air conditioning systems
- Light technology
- Combustion technology
- Conveying technology
- Wind energy and Photovoltaic
- Lifts and escalators

OUR **SOLUTIONS** RANGE

for machine building and plant engineering.

podis® – Power bus system installed safely and decentralized with high IP rating

RST® – Round connectors offer highest reliability with IP 69 rating

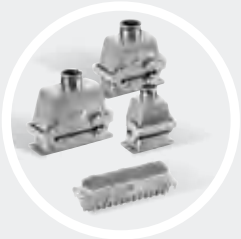

revos – Industrial connectors for reliable power and signal distribution

fasis + selos – Terminal blocks for the perfect fit in small spaces

Components and solutions for the safety of machines and plants

wiecon®– extensive portfolio of pluggable connectors for circuit boards

wipos power supply and wienet switches allow for an industrial network and data technology

wienet – Router, Gateways and Cloud Services for a reliable communication all over the world

| CONTENTS |

6 An overview of heavy duty connectors
10 General design of a ***revos*** industrial multipole connectors
12 The locking mechanism of the industrial multipole connectors
14 Connection technologies
16 Housing series
20 Contact inserts - Overview
24 Product matrix

26 **Contact inserts**
28 ***revos*** MINI
32 ***revos*** BASIC
60 ***revos*** DD
62 ***revos*** HD
70 ***revos*** POWER
86 ***revos*** IT
88 ***revos*** Ex
90 ***revos*** FLEX
110 ***revos*** MOT

112 **Housings**
114 ***revos*** MINI
118 ***revos*** BASIC
193 ***revos*** BASIC M
210 ***revos*** HD
224 ***revos*** Ex
244 Multipole connector sets with 4 components Screw connection

246 **Accessories**
248 Mounting frames
250 Cover- and Reducer plate
252 Coding accessories
257 Docking frame
258 Cable glands
262 Protective covers
266 Tools
267 Marking tag carriers

270 ***facts*&DATA**
272 Conductor connections, tightening torque
275 Definition of the IP degrees of protection
278 Current load capacity, Derating behavior
280 Selection criteria of the different contact surfaces
282 Explanations of applications in hazardous areas
284 Installation spacing and mounting dimensions
287 Mounting example ***revos*** Ex, cable-to-cable couplings
288 Crimping tool and Assignment of contacts to appropriate crimping tool

290 Detailed table of contents
292 Index
303 Selection of our catalogs

The *revos* program
An overview of heavy duty connectors

Heavy duty connectors are specifically designed for use in especially tough environment conditions. The main areas of use are the automotive industry, in packaging machinery and equipment, as well as for instrumentation, control and automation equipment.

They permit simple and time-saving installation of machinery and equipment. Their housings protect against mechanical impact and prevent entry of spray water and dust. The system's sub-assemblies can undergo a quality check in house, which simplifies installation and commissioning at their end use location.

Overview of the industrial multipole connector range *revos*

Contact inserts:

revos MINI

The contact inserts for the ***revos*** MINI connector series are very compact and available with 3 to 12 poles.

You will find the contact inserts for the ***revos*** MINI connectors on pages 28-31.

revos BASIC

The proven connectors and multipole adapters are available in 6 to 92 pole design with screw, spring clamp and crimp connection technology.

You will find ***revos*** BASIC contact inserts on pages 32–59.

revos DD

High contact density in the most compact space – this is what the space-saving contact inserts of ***revos*** DD offer. Connection is made with the proven turned crimp contacts, with a diameter of Ø 1.6 mm, which offer a connection range from 0.14 to 2.5 mm^2 at a rated voltage of 250 V (600 V CSA/UL).

You will find ***revos*** DD contact inserts on pages 60–61.

revos HD

Contact inserts and multipole adapters with 15 to 64 poles and for currents up to 10 A designed according to DIN EN 175301-801 (previously DIN 46352). The contact inserts are designed in crimp connection technology.

You will find ***revos*** HD contact inserts on pages 62–69.

revos POWER

The contact inserts and multipole adapters are designed for >16 A currents; they are also available with mixed contacts and screw connection.

You will find ***revos*** POWER contact inserts and terminal block adapters on pages 70–85.

revos FLEX

The modular system for the economical and clever mixture of contact inserts. With this flexible system you can customize your connector, to meet the requirements of your application.

You will find ***revos*** FLEX contact inserts on pages 90–109.

Housing families:

revos MINI

The design of the housings for the connectors of ***revos*** MINI is very compact and available in two materials:

- Die cast zinc alloy
- Polyamide

You will find ***revos*** MINI-housings on pages 114–115.

revos BASIC / ***revos*** BASIC M

PG threads are available on request!

The housing of the BASIC series are available in size 6 to 48. For convenient connection of the cables this series is also available in increased height design in sizes 6H–24H. The housings are made of die cast aluminum with, silicon-free finish. The connector series ***revos*** BASIC M is specifically designed for increased environmental requirements, with stainless steel lever and bolt and chemically stable sealing.

You will find ***revos*** BASIC-housings on pages 118–192.

You will find ***revos*** BASIC M-housings on pages 194–209.

revos HD

PG threads are available on request!

The housings of the HD series are available in size 10/15 to 32/50.

You will find ***revos*** HD-housings on pages 210–223.

Special multipole connector designs:

revos Ex

revos Ex multipole connectors are designed for special applications in hazardous areas. Their use in zone 1 for intrinsic circuits has been approved by the BVS test institute. The housings for the multipole connectors are manufactured from die cast zinc alloy.

You will find ***revos*** Ex-contact inserts on pages 88–89.

You will find ***revos*** Ex-housings on pages 224–243.

Operating instructions for Ex plug connectors, see facts&DATA.

revos IT

Data cable feed-throughs – the ideal solution for the installation of pre-assembled cables to enclosures. Sealed and with strain relief. Inserts with D-Sub connectors 9 to 100 pole.

You will find ***revos*** IT products on page 86.

revos MOT

revos MOT plug connectors with plastic housings, simple and easy handling due to its unique latching system.

You will find ***revos*** MOT products on pages 110–111.

General design of a *revos* industrial multipole connectors

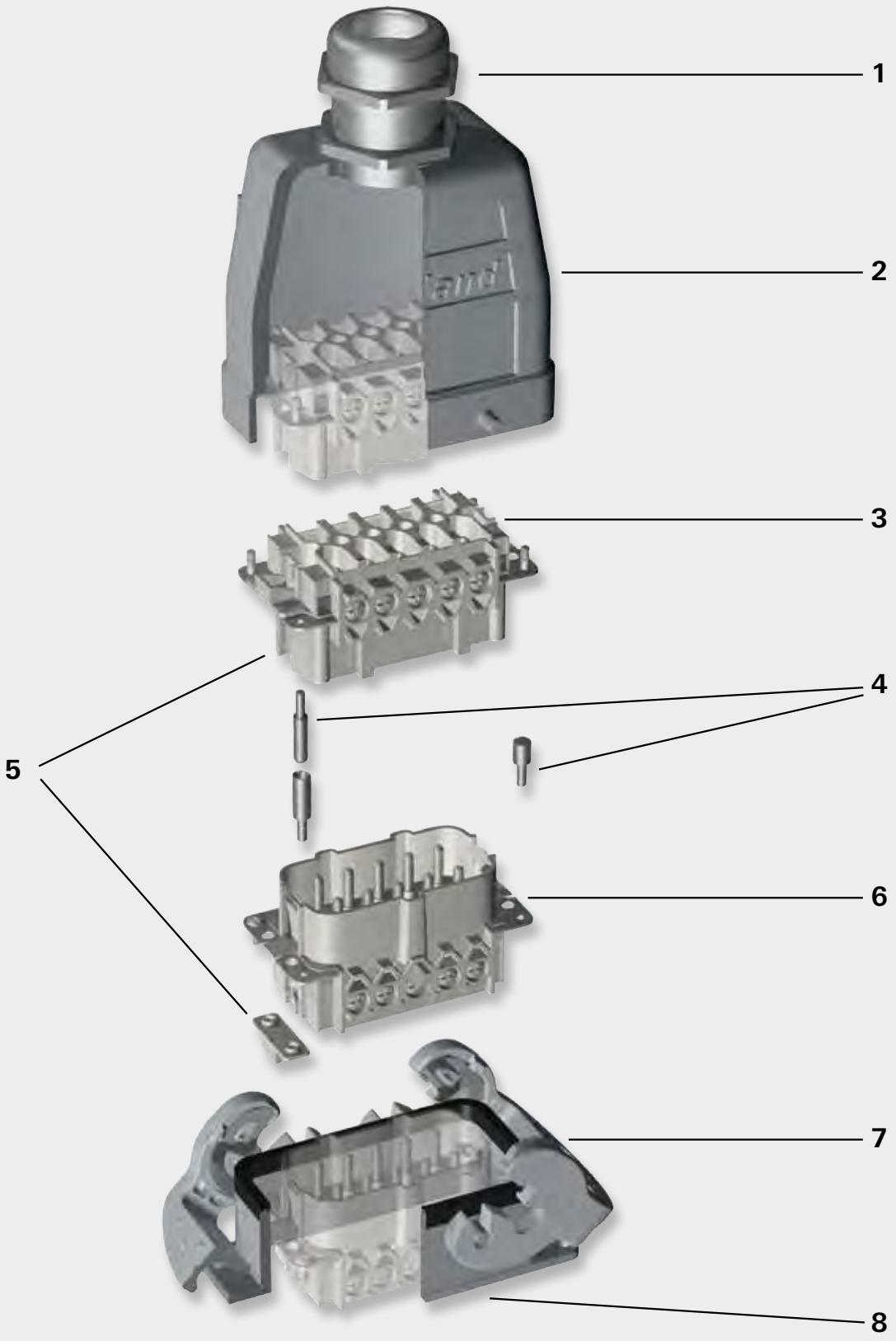

1. Cable glands

For revos industrial connectors the following cable glands are available:

- Cable gland without strain relief, protection degree IP54, 7x.xxx.xxxx.0 fully assembled
- Cable glands, protection degree IP68, available as accessories in plastic or brass
- EMC cable glands

2. Hoods

Aluminum die cast alloy, silicon-free finish (housings for ***revos*** Ex- and ***revos*** MINI are manufactured from die cast zinc alloy)

- Low and increased height designs available
- Cable entry at the side, on top or at the front
- With or without locking levers

3. Female inserts

Available in the following connection techniques:

- Screw connection
- Spring clamp connection
- Push-in connection
- Crimp connection

4. Coding accessories

Coding pins, female coding pieces and coding bolts

5. Coding bolts

Coding pieces are used for coding 690 V contact inserts.
In the 690 V housings the coding ribs are removed and insulating tape is attached inside the housing in order ensure the creepage distances and clearances to live parts.
This mechanical coding prevents the 690 V contact inserts from being mounted in 500 V housings.

6. Male inserts

Available in the following connection techniques:

- Screw connection
- Spring clamp connection
- Push-in connection
- Crimp connection

7. Locking levers

Single or double locking lever in plastic, steel or stainless steel design.

8. Bases

Aluminum die cast alloy, silicon-free finish (housings for (***revos*** Ex- und ***revos*** MINI are manufactured from die cast zinc alloy)

- Low and increased height designs available
- Open-bottom and closed-bottom bases
- Single or double locking lever of plastic, steel or stainless steel
- Coupling for “cable-to-cable connections”

The locking mechanism of the *revos* BASIC industrial multipole connectors

The locking levers secure the mechanical connection between hood and housing. The locking mechanism is also a main determinant of the connector's IP protection rating. Wieland's standard *revos* BASIC connectors in size 6 to 24 are equipped with locking levers that are made of two components.
The handle consists of flame-retardant and halogen-free plastic material and ensures convenient and almost wear-free locking. The retention force is provided by a spring component that is made of V2A stainless steel and also resists aggressive environmental conditions.

Locking features:

- Low-wear locking mechanism
- High holding forces
- Plastic material suitable for outdoor applications
- Salt and seawater resistant, UV resistant
- During overhead mounting the lever will remain in the open position
- Replaceable
- Self-extinguishing plastic material according to UL 94 V0

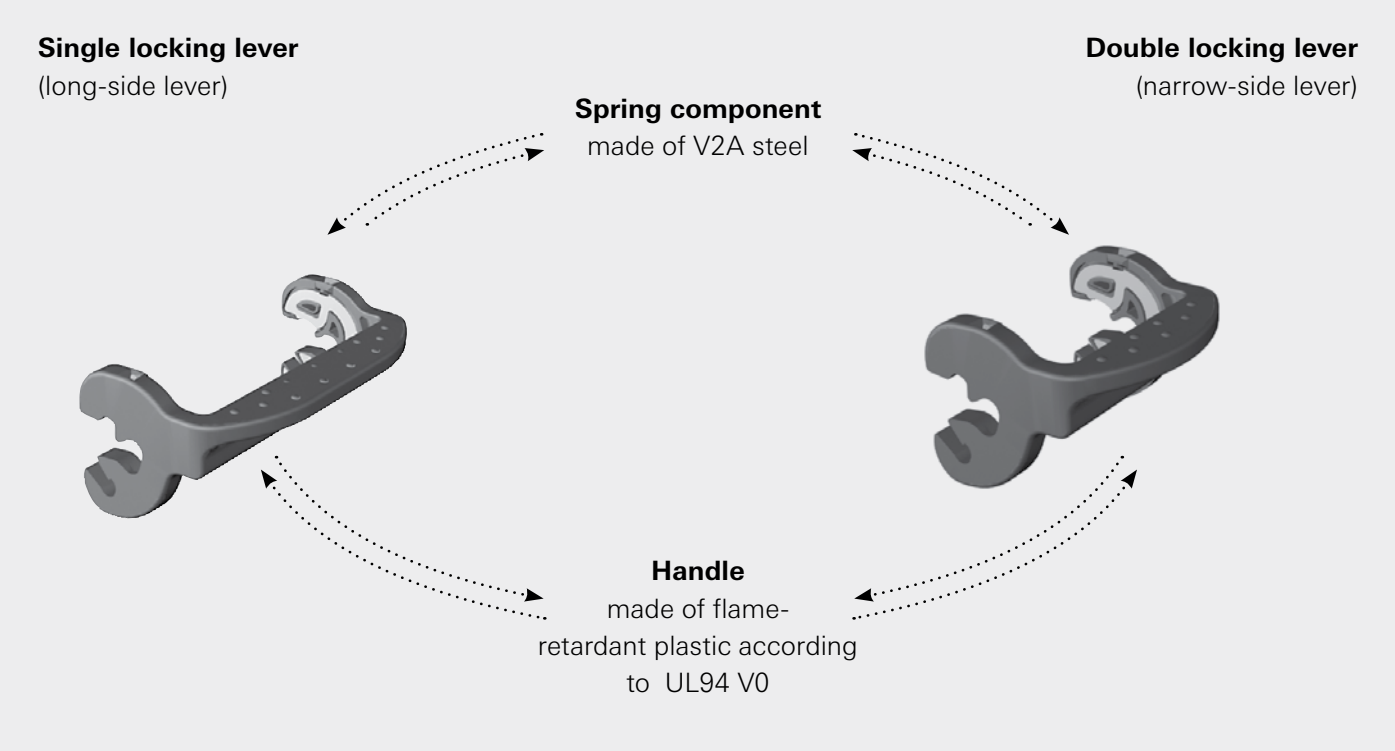

In general we distinguish levers on the hood and levers on the base, as well as single locking levers (on the long side) and double locking levers (on the narrow side).

On the opposite hood or base there are studs to which the lever latches.

The following lock types are available:

One long-side lever
(single locking lever)

Two narrow-side levers
(double locking lever)

Connectors for cable-to-cable couplings:

One long-side lever
(single locking lever)

Two narrow-side levers
(double locking lever)

Locking levers made of steel or stainless steel are available on request.
In case of any questions our connector hotline (+49 951/9324-997) will be happy to assist you.

Connection technologies

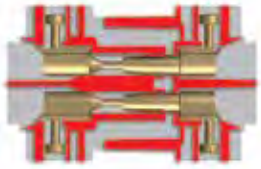

Screw connection technology:

This connection technology is the one most frequently used today. Screw connectors are designed according to EN 60 999/VDE 0609.

Features of this connection technology:

- Operation is simple and easy
- No special tools required
- High-quality connection that can be used for all areas of application
- Non-permanent connection, rewiring possible

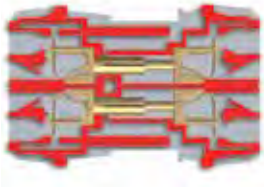

Spring clamp connection technology:

In the last few years this connection technology has been established as an industrial standard. Spring clamp connectors are designed according to EN 60 999/VDE 0609.

Features of this connection technology:

- Easy handling / No special tools required
- High-quality connection even under vibration
- Non-permanent connection, rewiring possible

For contact inserts with spring clamp connection technology all wire types (solid, stranded, fine-stranded) can be used without special preparation of the wires. When ferrules are used they must be crimped to the wire by means of a special positively driven crimping tool.

Push-in connection technology

Push-in, the simple, quick and tool-less connection system for prepared conductors.

Features of this connection technology:

- Extremely short connection time
- Gas-tight and vibration-proof connection
- Testing potentials even in the inserted state

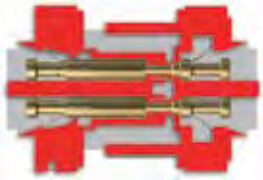

Crimp connection technology:

This connection technology provides the highest quality, but is also the most demanding. The technical requirements for crimp connections are defined in the IEC 60 352-2 standard. Crimp connections must always be produced using a crimping tool that has been designed for the contact. Wieland crimping tools are specifically adapted to the contacts and thus ensure a permanent and corrosion-resistant connection.

Features of this connection technology:

- High-quality connection similar to cold welding
- Consistant repeatability of the crimp connection
- Suitable for automation during pre-assembly of cable harnesses
- Compact design that allows a high contact density
- Special crimping tool required
- Permanent connection

Screw connection technology:

Screw terminals are measured in accordance with EN 60 999/VDE 0609.
Please refer to the respective tightening torques from table 4 on page 290.

The contact point can be delivered with or without wire protection.
Clamping bodies with wire protection do not require any preparation of the wires.
Clamping bodies without wire protection require appropriate preparation of the wires in case fine-stranded wires are used.

Spring clamp connection technology:

Operating instructions:

1. Insert the screwdriver using a slight curving motion into the rectangular opening.
2. Open the clamping body.
   The screwdriver will stay in position, and hold the clamping body open.
3. Insert the wire into the round wire entry guide and remove the screwdriver.

Screwdriver: 0.6 mm x 3.5 mm
Part number: 06.502.4000.0

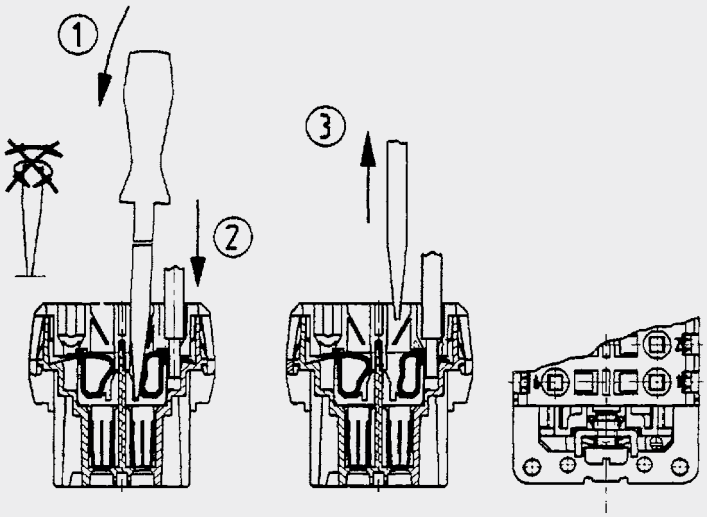

Crimp connection technology:

Using the suitable tools when producing crimp connections is essential. Correct and gas-tight connections can only be ensured by tools that are particularly adapted to the contact.
Wieland crimping tools compress the contact point with a so-called B crimp or a square crimp to make it gas-tight.

Micrograph of a B crimp

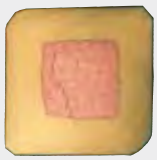

Micrograph of a square crimp

A contact to tool assignment can be found on page 305.
Contact materials:
revos-connectors are available with tin-plated, silver-plated or gold-plated contacts.
The basic material is a high-quality copper alloy.
For exact explanations, see pages 296–297.

Housing series *revos* BASIC

Single locking lever

Hoods

Bases

Size (GB):
- GB 6, 10, 16, 24, 48
- GB 6H, 10H, 16H, 24H

Motor connector housing

Coupling housings

Double locking lever

Hoods

GB 16XL, 24XL with extra large wiring space

Bases

Size (GB):
- GB 6, 10, 16, 24, 32
- GB 10H, 16H, 24H, 16XL, 24 XL

Coupling housings

H ≙ increased hight design; XL ≙ extra large wiring space. All bases are also available with a protective cover. For an assignment of the contact inserts to the housing sizes see page 20-23 as well as the product matrix on page 24-25.

Housing series *revos* HD

Single locking lever

Hoods

Bases

Size (GB):
- GB 10/15, 16/25

Double locking lever

Hoods

Bases

Size (GB):
- GB 32/50

Coupling housings

All bases are also available with a protective cover.
For an assignment of the contact inserts to the housing sizes see page 20-23 as well as the product matrix on page 24-25.

Housing series *revos* MINI and *revos* Ex

revos MINI

Hoods

Bases

Coupling housings

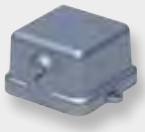

Cover without gasket for female inserts

Cover with gasket for male inserts

---

revos Ex

Hoods

Bases

Coupling housings

Size (GB):

- GB 10Ex, 16Ex, 24Ex, double locking lever
- GB 6Ex, 48Ex, single locking lever

Bases are also available with a protective cover!

Contact inserts

Contact inserts for the housings of the *revos* BASIC series

Size	BASIC 500 V / 16 A	BASIC 400/690 V / 16 A	BASIC 690 V / 16 A	BASIC 830 V / 16 A	EE 500 V / 16 A
6/ 6H	 6 + ground		 4/2 Switching contacts + ground		 10 + ground
10/ 10H	 10 + ground	 3/2 Switching contacts + ground	 8/2 Switching contacts + ground	 3/2 Switching contacts + ground	 18 + ground
16/ 16H	 16 + ground	 6/2 Switching contacts + ground	 14/2 Switching contacts + ground	 6/2 Switching contacts + ground	 32 + ground
24/ 24H	 24 + ground	 10/2 Switching contacts + ground	 22/2 Switching contacts + ground	 10/2 Switching contacts + ground	 46 + ground
32	 32 + ground				
48	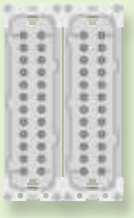 48 + ground				

DD 250 V / 10 A	HD 250 V / 10 A	POWER 230–690 V / 16–100 A	FLEX 100 – 1000 V / 4 – 82 A	Size
 24 + ground			 2 Modules	6/ 6H
 42 + ground		 8/24 + ground	 3 Modules	10/ 10H
 72 + ground	 40 + ground	 6/6 + ground  4/6 + ground  6 + ground  4/2 + ground  4 + ground 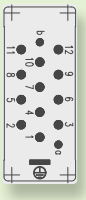 12/2 + ground 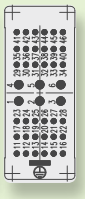 6/36 + ground	 5 Modules	16/ 16H
 108 + ground	 64 + ground	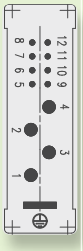 4/8 + ground  3/3/6 + ground	 7 Modules	24/ 24H
				32

Contact inserts

Contact inserts für *revos* HD-housings

Size	HD 10/16 250 V / 16 A	HD 15/25 250 V / 10 A
10/ 15	 10 + ground	 15 + ground
16/ 25	 16 + ground	 25 + ground
32/ 50	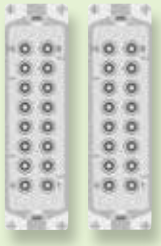 32 + ground	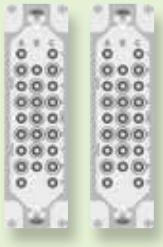 50 + ground

Contact inserts for *revos* MINI-housings

Size	250 – 400 V / 10 A	400 V / 10 A	400 V / 16 A	50 – 250 V / 10 A	50 V / 10 A	690 V / 10 A
3	 3 + ground	 4 + ground	 5 + ground	 7 + ground	 8	 12

Contact inserts for *revos* Ex-housings

Size	6Ex	10Ex	16Ex	24Ex	48Ex
Ex 90 V 16 A	 6 + ground	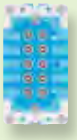 10 + ground	 16 + ground	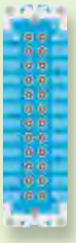 24 + ground	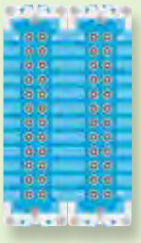 48 + ground

Contact inserts

revos FLEX-modular inserts

Modules for power supply

2-pole
1000 V/82 A
Screw

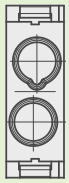

2-pole
1000 V/65 A
Crimp

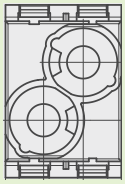

2-pole
1000 V/150 A
Crimp

3-pole
630 V/40 A
Crimp

5-pole
250 V/20 A
Crimp

4-pole
1000 V/16 A
Crimp

4-pole
400 V/14 A
Spring clamp

Modules for signal distribution

10-pole
250 V/10 A
Crimp/LWL-POF

20-pole
100 V/4 A
Crimp

High voltage

2-pole
5.5 kV/20 A
Crimp

Compressed air

Pneumatic
1-pole
10 bar – Ø 2.5/4 mm

Pneumatic
2-pole
10 bar – Ø 2.5/4 mm

Bus systems

USB
4-pole
30 V/1 A
Screw

Profibus
4-pole
30 V/1 A
Screw

Ethernet
8 plus 4-pole
30 V/1 A / 400 V/10 A
Crimp/optical fiber

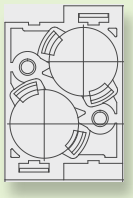

TWIN BUS
4-polig
50 V/10 A
Crimp

Special modules

Modular blind piece

revos MOT special designs

690 V / 16 A

10 + ground

Product matrix

The ***revos*** product matrix provides an overview of the available families of contact inserts and their matching housing series. Horizontally you can find the contact inserts sorted per family and with indications for rated voltage, rated current and connection technology. Vertically the housing series and their variations in size are shown. Matching combinations are found in the matrix.

The restrictions of the ***revos*** FLEX and ***revos*** HD contact inserts are caused by their depth and cable density inside the housing when fully equipped with contact inserts. In case of any questions regarding these combinations, our connector hotline (+49 951 9324-991) will be happy to assist you.

Housing series	Material	Variantion	Size (GB)	Locking levers	Hoods page	Bases page
BASIC 	Aluminum die cast	Standard housings	6	Single	118	122
			10	Single	126	130
				Double	134–136	140
			16	Single	144	160
				Double	152–154	176
			24	Single	164	168
				Double	172–174	180
			32	Double	184	185
			48	Single	186	188
		Increased height design	6H	Single	120	124
			10H	Single	128	132
				Double	138	142
			16H	Single	146	162
				Double	156–158	178
			24H	Single	166	170
				Double	176–178	182
		large wiring space	16XL	Double	159	
			24XL	Double	195	
		EMC housings	6/6H	Single	190	191
			10/10H	Double	190	191
			16/16H	Double	190	191
			24	Double	190	191
		Motor conn. hous.	10	Single		192
BASIC M 		Increased environmental requirements	6	Single	194	196
			10	Single	198	200
			16	Single	202	204
			24	Single	206	208
HD 	Aluminum die cast	250 V	10/15	Single	210	212
			16/25	Single	214	216
			32/50	Double	218, 220	222
MINI 	Polyamide	Plastic	3	Single	114	115
	Die cast zinc alloy	Metal	3	Single	114, 116	115, 117
Ex 	Die cast zinc alloy	90 V	6 Ex	Single	224	226
			10 Ex	Double	228	230
			16 Ex	Double	232	234
			24 Ex	Double	236	238
			48 Ex	Single	240	242
MOT 	Polyamide	690 V	10 + ground	Push-Pull	110	110
FLEX COMPACT 		1M	1 M	Single	108	108

H ≙ Increased height design; XL ≙ Large wiring space

Contact inserts

Wiring technique
S = screw F = spring clamp C = srimp L = optical fiber P = push-in

BASIC 500 V 16 A	BASIC EE 500 V 16 A	BASIC 400V/690V 16 A	BASIC 690 V 16 A	BASIC 830 V 16 A	HD 40/64 250 V 10 A	POWER 230–690 V 16–100 A	FLEX 100–1000 V 4–150 A	DD 250 V 16 A	HD 10/16//32 250 V 16 A	HD 15/25 250 V 10 A	MINI 50–400 V 10 A	Ex 90 V 16 A	MOT 690 V 16 A
S / F C / P	C	S	S / C	F	C	S / C	F / C S / L	C	S	C	S	S	C
32–41	42–43	52–53	54–57	58–59	66–67	70–85	90–107	60–61	62–63	64–65	28–31	88–89	111
●	●	●	●	●			○	○					
●	●	●	●	●			○	○					
●	●	●	●	●			○	○					
●	●	●	●	●	○		○	○					
●	●	●	●	●	○		○	○					
●	●	●	●	●	○		○	●					
●	●	●	●	●	○		○	●					
●	●		●			●	●	●					
●	●	●	●	●		●	●	●					
●	●	●	●	●			●	●					
●	●	●	●	●			●	●					
●	●	●	●	●			●	●					
●	●	●	●	●	●	●	●	●					
●	●	●	●	●	●	●	●	●					
●	●	●	●	●	●	●	●	●					
●	●	●	●	●	●	●	●	●					
●	●	●	●	●	●	●	●	●					
●	●	●	●	●	●	●	●	●					
●	●						●	●					
●	●						●	●					
●	●				●	●	●	●					
●	●				●	●	●	●					
●	●	●	●	●			○	○					
●	●	●	●	●			○	○					
●	●	●	●	●	○		○	○					
●	●	●	●	●	○		○	●					
									●	●			
									●	●			
									●	●			
											●		
											●		
												●	
												●	
												●	
												●	
												●	
													●
							○						

○ = usable subject to restrictions
● = usable without any restrictions

revos contact inserts offer many possibilities

The task of the contact inserts is distribution of power and signals. The contact inserts are available in 2- to 216-pin design. They are suitable for current from 4 to 100 A and voltages up to 5.5 kV.

revos MINI - Their especially compact design allows them to fit in applications for machine, control and switching systems, or also in small motors and lighting equipment, and also serve as classic contact inserts
for industrial heavy duty connectors.
revos BASIC is able to meet the toughest demands and so is used, for example, in the automotive industry, the machinery and equipment industry, in conveyor systems and in measurement and control technology.

Contact inserts

Contact inserts ***revos*** MINI

3-pole + ground

4-pole + ground

Description	Type	Part No.	P.U.
Contact inserts *revos* MINI	**3-pole + ground**		
Male insert	MIN STS 3 2,5 40	73.310.0353.0	10
Female insert	MIN BUS 3 2,5 40	73.300.0353.0	10
Contact inserts *revos* MINI	**4-pole + ground**		
Male insert	MIN STS 4 2,5 40 AG	73.310.0453.0	10
Female insert	MIN BUS 4 2,5 40 AG	73.300.0453.0	10

Technical data	**3-pole + ground**	**4-pole + ground**
Rated voltage		
Installed in a plastic housing	400 V	
Installed in a metal housing	L-PE 250 V / L-L 400 V	400 V
Rated voltage according to UL/CSA	600 V	
Rated impulse voltage		
Plastic housing	4 kV	
Metal housing	4 kV	
Rated current	10 A	
Degree of pollution	3	
Rated cross section		
EN 60999	0.5 – 2.5 mm²	
UL	18 – 16 AWG	22 – 12 AWG
CSA	22 – 12 AWG	
Contacts		
Material	Copper alloy	
Surface	Sn	Ag
Insulation strip length	4 mm	
Contact resistance	≤ 2 mΩ	≤ 1.5 mΩ
Mating cycles	50	200
Screws	head design / recomm. torque	
Mounting screws	M3 / 0.5 – 0.7 Nm	
Clamping screws	M3 / 0.5 – 0.7 Nm	
Ground conductor screws	M3 / 0.5 – 0.7 Nm	
Temperature range	-40 … +120 °C	

Housing *revos* MINI Page 114–117

Dimensions

3-pole + ground

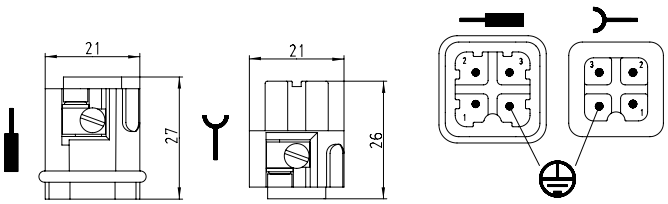

4-pole + ground

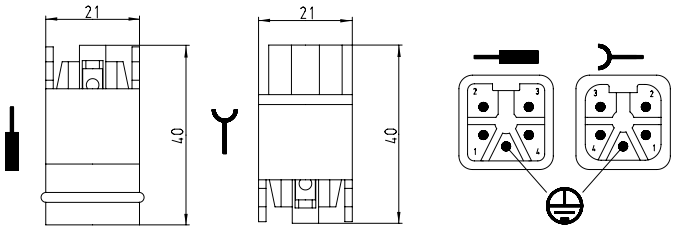

7-pole + ground

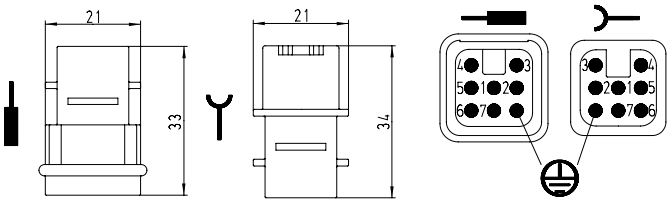

8-pole

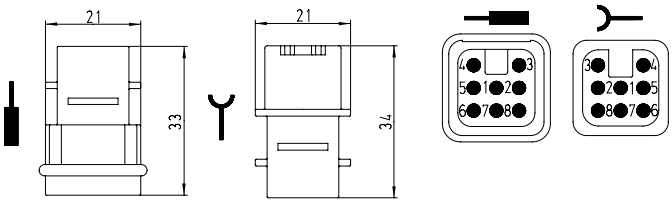

Contact inserts

Contact inserts ***revos*** MINI

7-pole + ground

8-pole

Description	Type	Part No.	P.U.
Contact inserts *revos* MINI	**7-pole + ground**		
Male insert without crimp contacts	MIN STC 7 25	73.710.0753.0	10
Female insert without crimp contacts	MIN BUC 7 25	73.700.0753.0	10
Contact inserts *revos* MINI	**8-pole**		
Male insert without crimp contacts	MIN STC 8 05	73.710.0853.0	10
Female insert without crimp contacts	MIN BUC 8 05	73.700.0853.0	10
Contacts for crimp version	mm² / AWG		
Male reel contacts, Sn	0.2 – 0.56 / 24-20	05.544.0900.0	5000
Female reel contacts, Sn	0.2 – 0.56 / 24-20	02.124.0900.0	5000
Male reel contacts, Sn	0.75 – 1.5 / 18-16	05.544.1000.0	5000
Female reel contacts, Sn	0.75 – 1.5 / 18-16	02.124.1000.0	5000
Male single contacts, Sn	0.2 – 0.56 / 24-20	05.544.0929.0	200
Female single contacts, Sn	0.2 – 0.56 / 24-20	02.124.0929.0	200
Male single contacts, Sn	0.75 – 1.5 / 18-16	05.544.1029.0	200
Female single contacts, Sn	0.75 – 1.5 / 18-16	02.124.1029.0	200
Male reel contacts, Au	0.5 – 1.5 / 20-16	05.544.1400.0	5000
Female reel contacts, Au	0.5 – 1.5 / 20-16	02.124.1400.0	5000
Male single contacts, Au	0.5 – 1.5 / 20-16	05.544.1429.0	200
Female single contacts, Au	0.5 – 1.5 / 20-16	02.124.1429.0	200

Technical data	7-pole + ground	8-pole
Rated voltage		
Installed in a plastic housing	250 V	50 V
Installed in a metal housing	50 V	50 V
Rated voltage according to UL/CSA	600 V (Metal housing 42 V)	42 V
Rated impulse voltage		
Plastic housing	4 kV	0.8 kV
Metal housing	0.8 kV	
Rated current	10 A	
Degree of pollution	3	
Rated cross section		
EN 60999	0.2 – 1.5 mm²	
UL	18 – 16 AWG	
CSA	24 – 16 AWG	
Contacts		
Material	Copper alloy	
Surface	Au or SN	
Insulation strip length	4 mm	
Contact resistance	4 mΩ	
Mating cycles	Sn 50 / Au 500	
Screws	head design / recomm. torque	
Mounting screws	M3 / 0.5 – 0.7 Nm	
Clamping screws	-	
Ground conductor screws	-	
Temperature range	-40 – +120 °C	

Description	Type	Part No.	P.U.
Accessories			
Crimping tool		95.101.0800.0	1
Crimping die	"E"	05.502.2400.0	1
Contact positioner	"2"	05.502.3200.0	1
Extraction tool		05.502.0000.0	1
Housing *revos* MINI		Page 114–117	

Derating curve

according to IEC 60512 sec. 3

revos MINI

10 A / 2.5 mm² / 1.5 mm²

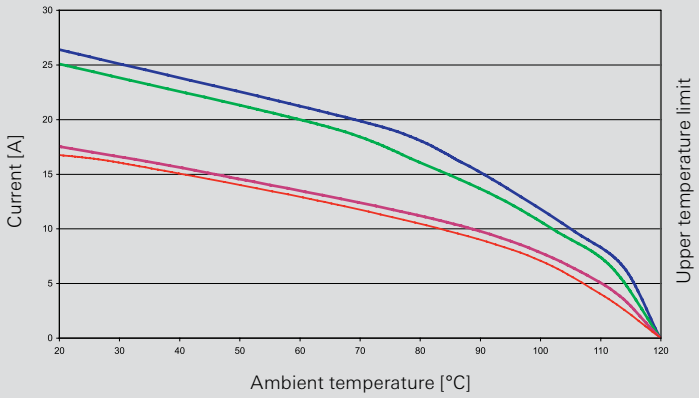

Contact inserts

Contact inserts ***revos*** MINI

5-pole + ground

Description	Type	Part No.	P.U.
Contact inserts *revos* MINI	**5-pole + ground**		
Male insert without crimp contacts	MIN STC 5 25 AG	73.710.0553.0	10
Female insert without crimp contacts	MIN BUC 5 25 AG	73.700.0553.0	10
Contacts for crimp version	mm^2 / AWG, turned ø 2.5 mm		
Male insert	0.5 / 20	05.543.70xx.0	200
Female insert	0.5 / 20	02.123.70xx.0	200
Male insert	0.75 – 1 / 18	05.543.71xx.0	200
Female insert	0.75 – 1 / 18	02.123.71xx.0	200
Male insert	1.5 / 16	05.543.72xx.0	200
Female insert	1.5 / 16	02.123.72xx.0	200
Male insert	2.5 / 14	05.543.73xx.0	200
Female insert	2.5 / 14	02.123.73xx.0	200
Male insert	4 / 12	05.543.74xx.0	200
Female insert	4 / 12	02.123.74xx.0	200
Surface	silver-plated xx = 02 / gold-plated xx = 01		

Technical data	
Rated voltage	
Installed in a plastic housing	L-PE 250 V / L-L 400 V
Installed in a metal housing	L-PE 250 V / L-L 400 V
Rated voltage according to UL/CSA	600 V
Rated impulse voltage	
Plastic housing	6 kV
Metal housing	6 kV
Rated current	16 A
Degree of pollution	3
Rated cross section	
EN 60999	0.5 – 4 mm^2, ground: 2.5 mm^2
UL	20 – 12 AWG
CSA	20 – 12 AWG
Contacts	
Material	Copper alloy
Surface	Au or Ag
Mating cycles	200
Screws	head design / recomm. torque
Mounting screws	M3 / 0.5 – 0.7 Nm
Clamping screws	-
Ground conductor screws	M3 / 0.5 – 0.7 Nm
Temperature range	-40 … +120 °C

Description	Type	Part No.	P.U.
Accessories			
Crimping tool		95.101.0800.0	1
Crimping die	"B"	05.502.2100.0	1
Contact positioner	"3"	05.502.3300.0	1
Extraction tool		05.502.3500.0	1
Housing *revos* MINI		Page 114–117	

Dimensions

5-pole + ground

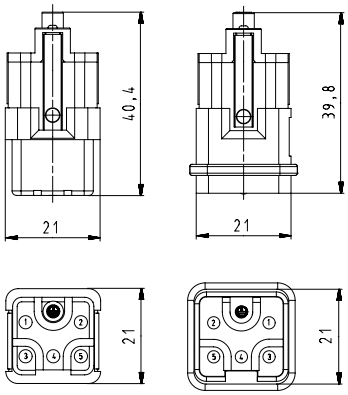

12-pole + ground

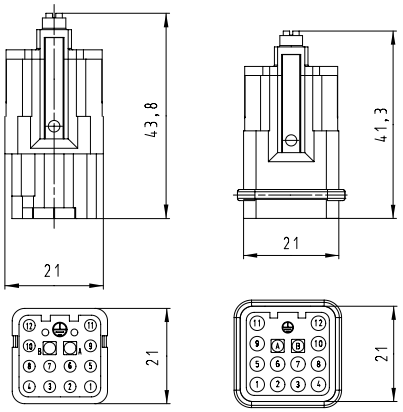

Contact inserts

Contact inserts *revos* MINI

12-pole + ground

Coding piece

Testing potentials see page 272

Star jumper

Triangle jumper

If the triangle jumper is used, the high version of the housing upper part is required (76.362.0736.x/see p. 114)

Description	Type	Part No.	P.U.
Contact inserts *revos* MINI	**12-pole + ground**		
Male insert without crimp contacts	MIN STC 12 40 AG	73.710.1253.0	10
Female insert without crimp contacts	MIN BUC 12 40 AG	73.700.1253.0	10
Contacts for crimp version	mm² / AWG, turned ø 1.6 mm		
Male insert	0.14 – 0.37 / 26 – 22	05.544.4129.x	100
Female insert	0.14 – 0.37 / 26 – 22	02.125.4129.x	100
Male insert	0.5 / 20	05.544.4229.x	100
Female insert	0.5 / 20	02.125.4229.x	100
Male insert	0.75 – 1.0 / 18	05.544.4329.x	100
Female insert	0.75 – 1.0 / 18	02.125.4329.x	100
Male insert	1.5 / 16	05.544.4429.x	100
Female insert	1.5 / 16	02.125.4429.x	100
Male insert	2.5 / 14	05.544.4529.x	100
Female insert	2.5 / 14	02.125.4529.x	100
Surface	silver-plated x = 8 / gold-plated x = 7		
LWL POF Contacts Ø 1,6			
Male insert		02.125.2421.0	5
Female insert		05.544.8121.0	5

Technical data	
Rated voltage	
Installed in a plastic housing	L-PE 400 V / L-L 690 V
Installed in a metal housing	L-PE 400 V / L-L 690 V
Rated voltage according to UL/CSA	600 V
Rated impulse voltage	
Plastic housing	4 kV
Metal housing	4 kV
Rated current	10 A (UL/CSA 14 A)
Degree of pollution	3
Rated cross section	
EN 60999	0.14 – 2.5 mm², ground: 2.5 mm²
UL	24 - 12 AWG
CSA	24 - 12 AWG
Contacts	
Material	Copper alloy
Surface	Au or Ag
Mating cycles	200
Screws	head design / recomm. torque
Mounting screws	M3 / 0.5 – 0.7 Nm
Clamping screws	-
Ground conductor screws	M3 / 0.5 – 0.7 Nm
Temperature range	-40 … +120 °C

Description	Type	Part No.	P.U.
Accessories			
Crimping tool		95.101.0800.0	1
Crimping die	"B"	05.502.2100.0	1
Contact positioner	"1"	05.502.3100.0	1
Extraction tool		05.502.0710.0	1
Set of tools for optical fiber POF contacts		95.101.2000.0	1
Coding piece	MIN KOD 12	05.568.0353.0	20
Star jumper	MIN BR ST 12 BU	Z7.280.4327.0	5
Triangle jumper	MIN BR DR 12 BU	Z7.280.4227.0	5
Housing *revos* MINI		Page 114-117	

Derating curve

according to IEC 60512 sec. 3

revos MINI

wire size 1.5 mm²

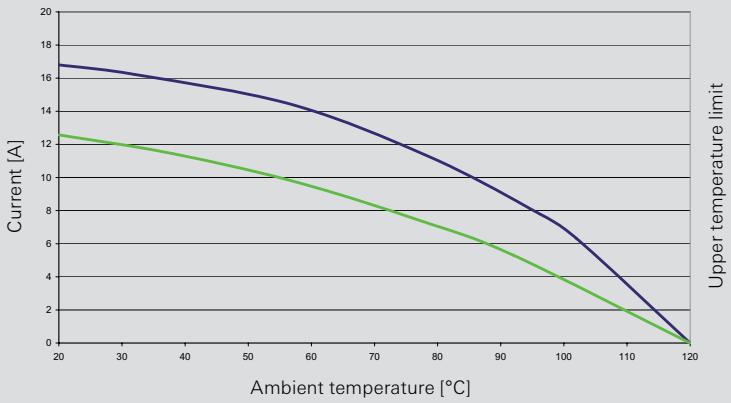

500 V contact inserts, screw connection

Contact inserts ***revos*** BASIC

VDE-PB

6-pole + ground
Size 6

10-pole + ground
Size 10

16-pole + ground
Size 16

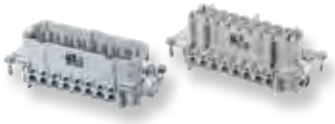

24-pole + ground
Size 24

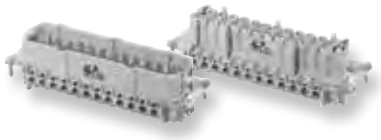

32-pole + ground
Size 32

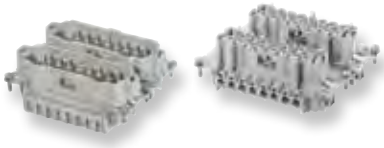

48-pole + ground
Size 48

* Preparation of the wire required: ferrrule, ultrasonic welding for flexible cables

Description	Type	Part No.	P.U.
Contact inserts *revos* BASIC 500 V	**6-pole + ground**		
Male insert with wire protection, Sn	BAS STS 6 2,5 50	70.310.0640.0	10
Male insert with wire protection, Ag	BAS STS 6 2,5 50 AG	70.310.0602.0	10
Male insert with wire protection, Au	BAS STS 6 2,5 50 AU	70.311.0640.0	10
Male insert without wire protection, Sn*	BAS STS OD 6 2,5 50	70.312.0640.0	10
Female insert with wire protection, Sn	BAS BUS 6 2,5 50	70.300.0640.0	10
Female insert with wire protection, Ag	BAS BUS 6 2,5 50 AG	70.300.0602.0	10
Female insert with wire protection, Au	BAS BUS 6 2,5 50 AU	70.301.0640.0	10
Female insert without wire protection, Sn*	BAS BUS OD 6 2,5 50	70.302.0640.0	10
Contact inserts *revos* BASIC 500 V	**10-pole + ground**		
Male insert with wire protection, Sn	BAS STS 10 2,5 50	70.310.1040.0	10
Male insert with wire protection, Ag	BAS STS 10 2,5 50 AG	70.310.1002.0	10
Male insert with wire protection, Au	BAS STS 10 2,5 50 AU	70.311.1040.0	10
Male insert without wire protection, Sn*	BAS STS OD 10 2,5 50	70.312.1040.0	10
Female insert with wire protection, Sn	BAS BUS 10 2,5 50	70.300.1040.0	10
Female insert with wire protection, Ag	BAS BUS 10 2,5 50 AG	70.300.1002.0	10
Female insert with wire protection, Au	BAS BUS 10 2,5 50 AU	70.301.1040.0	10
Female insert without wire protection, Sn*	BAS BUS OD 10 2,5 50	70.302.1040.0	10
Contact inserts *revos* BASIC 500 V	**16-pole + ground**		
Male insert with wire protection, Sn	BAS STS 16 2,5 50	70.310.1640.0	10
Male insert with wire protection, Ag	BAS STS 16 2,5 50 AG	70.310.1602.0	10
Male insert with wire protection, Au	BAS STS 16 2,5 50 AU	70.311.1640.0	10
Male insert without wire protection, Sn*	BAS STS OD 16 2,5 50	70.312.1640.0	10
Female insert with wire protection, Sn	BAS BUS 16 2,5 50	70.300.1640.0	10
Female insert with wire protection, Ag	BAS BUS 16 2,5 50 AG	70.300.1602.0	10
Female insert with wire protection, Au	BAS BUS 16 2,5 50 AU	70.301.1640.0	10
Female insert without wire protection, Sn*	BAS BUS OD 16 2,5 50	70.302.1640.0	10
Contact inserts *revos* BASIC 500 V	**24-pole + ground**		
Male insert with wire protection, Sn	BAS STS 24 2,5 50	70.310.2440.0	10
Male insert with wire protection, Ag	BAS STS 24 2,5 50 AG	70.310.2402.0	10
Male insert with wire protection, Au	BAS STS 24 2,5 50 AU	70.311.2440.0	10
Male insert without wire protection, Sn*	BAS STS OD 24 2,5 50	70.312.2440.0	10
Female insert with wire protection, Sn	BAS BUS 24 2,5 50	70.300.2440.0	10
Female insert with wire protection, Ag	BAS BUS 24 2,5 50 AG	70.300.2402.0	10
Female insert with wire protection, Au	BAS BUS 24 2,5 50 AU	70.301.2440.0	10
Female insert without wire protection, Sn*	BAS BUS OD 24 2,5 50	70.302.2440.0	10
Contact inserts *revos* BASIC 500 V	**32-pole + ground**		
Male insert with wire protection, Sn, marked 1-16, 17-32	BAS STS 32 2,5 50	70.310.3253.0	5
Male insert with wire protection, Ag, marked 1-16, 17-32	BAS STS 32 2,5 50 AG	70.310.3202.0	5
Female insert with wire protection, Sn, marked 1-16, 17-32	BAS BUS 32 2,5 50	70.300.3253.0	5
Female insert with wire protection, Ag, marked 1-16, 17-32	BAS BUS 32 2,5 50 AG	70.300.3202.0	5
Contact inserts *revos* BASIC 500 V	**48-pole + ground**		
Male insert with wire protection, Sn, marked 1-24, 25-48	BAS STS 48 2,5 50	70.310.4840.0	5
Female insert with wire protection, Sn, marked 1-24, 25-48	BAS BUS 48 2,5 50	70.300.4840.0	5

Technical data	
Rated voltage	500 V
Rated voltage according to UL/CSA	600 V
Rated impulse voltage	6 kV
Rated current	16 A
Degree of pollution	3
Rated cross section	
EN 60999	0.5 – 2.5 mm^2
UL	20 – 12 AWG
CSA	20 – 12 AWG
Contacts	
Material	Copper alloy
Surface	Sn, Ag, Au
Insulation strip length	7 mm
Contact resistance	≤ 1,5 mΩ
Mating cycles	Sn 200 / Ag, Au 500
Screws	head design / recomm. torque
Mounting screws	H1 / 0.5 – 0.7 Nm
Clamping screws	H1 / 0.5 – 0.7 Nm
Ground conductor screws	H2 / 1.2 – 1.6 Nm
Temperature range	-40 … +120 °C

Housing *revos* BASIC / *revos* BASIC M	Type	Page
Size	6/6H	118–125, 190–191, 194, 196
Size	10/10H	126–143, 190-192, 198, 200
Size	16/16H	144–163, 190-191, 202, 204
Size	24/24H	164–183, 190-191, 206, 208
Size	32	184–185
Size	48	186–189

Dimensions

6-pole + ground – 24-pole + ground

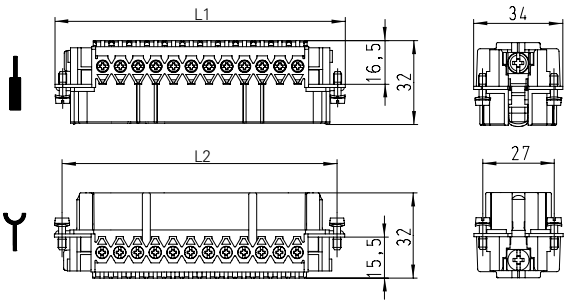

Number of poles	L1 [mm]	L2 [mm]
6	50.5	44.0
10	63.0	57.0
16	83.0	77.5
24	110.8	104.0

6-pole + ground

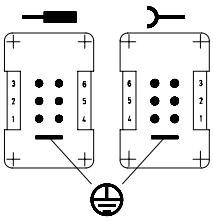

10-pole + ground

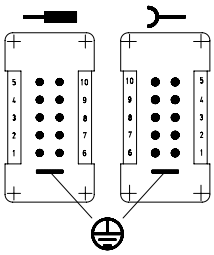

16-pole + ground

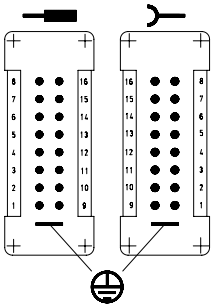

24-pole + ground

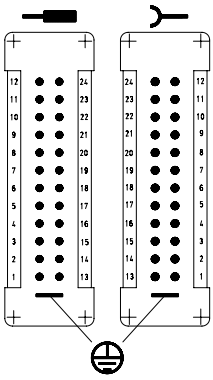

32-pole + ground

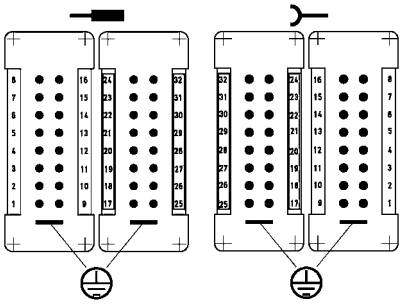

48-pole + ground

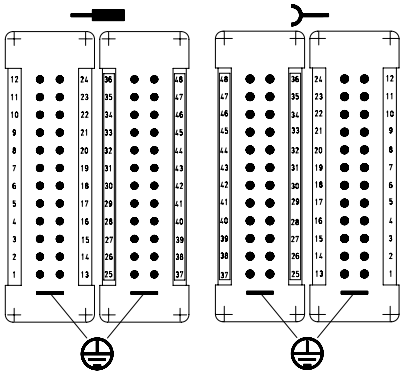

Derating curve

according to IEC 60512 sec. 3

revos BASIC

Screw version 500V / 16 A / 2.5 mm²

- 6-pole
- 10-pole
- 16-pole
- 24-pole

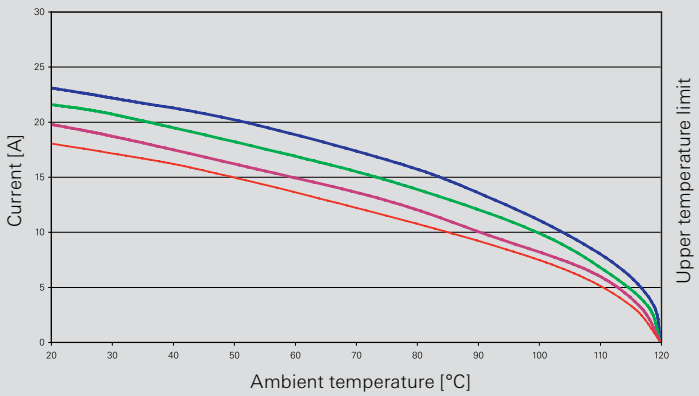

500 V contact inserts, spring clamp connection

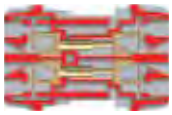

Contact inserts *revos* BASIC

6-pole + ground
Size 6

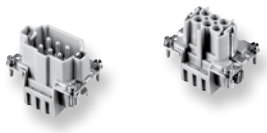

10-pole + ground
Size 10

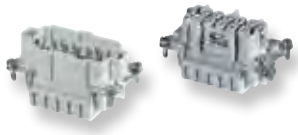

16-pole + ground
Size 16

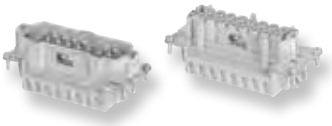

24-pole + ground
Size 24

32-pole + ground
Size 32

48-pole + ground
Size 48

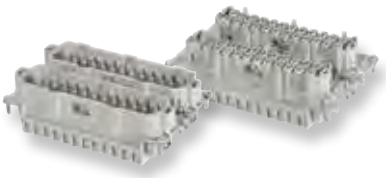

Description	Type	Part No.	P.U.
Contact inserts *revos* BASIC 500 V	**6-pole + ground**		
Male insert	BAS STF 6 2,5 50	70.510.0653.0	10
Female insert	BAS BUF 6 2,5 50	70.500.0653.0	10
Contact inserts *revos* BASIC 500 V	**10-pole + ground**		
Male insert	BAS STF 10 2,5 50	70.510.1053.0	10
Female insert	BAS BUF 10 2,5 50	70.500.1053.0	10
Contact inserts *revos* BASIC 500 V	**16-pole + ground**		
Male insert	BAS STF 16 2,5 50	70.510.1653.0	10
Female insert	BAS BUF 16 2,5 50	70.500.1653.0	10
Contact inserts *revos* BASIC 500 V	**24-pole + ground**		
Male insert	BAS STF 24 2,5 50	70.510.2453.0	10
Female insert	BAS BUS 24 2,5 50	70.500.2453.0	10
Contact inserts *revos* BASIC 500 V	**32-pole + ground**		
Male insert, marked 1-16, 17-32	BAS STF 32 2,5 50	70.510.3253.0	5
Female insert, marked 1-16, 17-32	BAS BUF 32 2,5 50	70.500.3253.0	5
Contact inserts *revos* BASIC 500 V	**48-pole + ground**		
Male insert, marked 1-24, 25-48	BAS STF 48 2,5 50	70.510.4853.0	5
Female insert, marked 1-24, 25-48	BAS BUF 48 2,5 50	70.500.4853.0	5

Technical data	
Rated voltage	500 V
Rated voltage according to UL/CSA	600 V
Rated impulse voltage	6 kV
Rated current	16 A
Degree of pollution	3
Rated cross section	
EN 60999	0.14 – 2.5 mm²
UL	26 – 12 AWG
CSA	26 – 12 AWG
Contacts	
Material	Copper alloy
Surface	Ag
Insulation strip length	7 mm
Contact resistance	≤ 3 mΩ
Mating cycles	500
Screws	head design / recomm. torque
Mounting screws	H1 / 0.5 – 0.7 Nm
Clamping screws	-
Ground conductor screws	H2 / 1.2 – 1.6 Nm
Temperature range	-40 … +120 °C

Description	Type	Part No.	P.U.
Accessories			
Screwdriver blade	DIN 5264 A 0,6 x 3,5	06.502.4000.0	5

Housing *revos* BASIC / *revos* BASIC M	Type	Page
Size	6/6H	118–125, 190–191, 194, 196
Size	10/10H	126–143, 190-192, 198, 200
Size	16/16H	144–163, 190-191, 202, 204
Size	24/24H	164–183, 190-191, 206, 208
Size	32	184–185
Size	48	186–189

Dimensions

6-pole + ground – 24-pole + ground

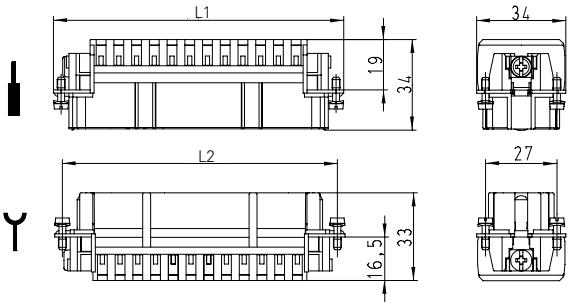

Number of poles	L1 [mm]	L2 [mm]
6	50.0	44.0
10	63.0	57.0
16	83.0	77.5
24	110.0	104.0

6-pole + ground

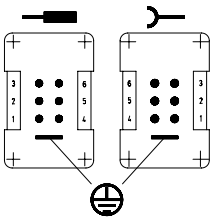

10-pole + ground

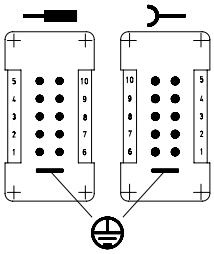

16-pole + ground

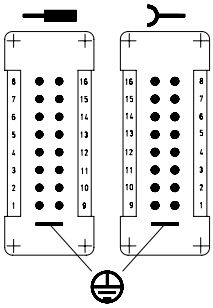

24-pole + ground

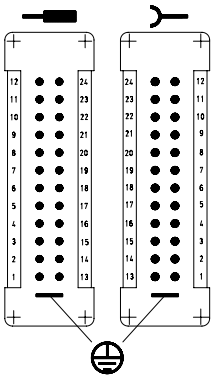

32-pole + ground

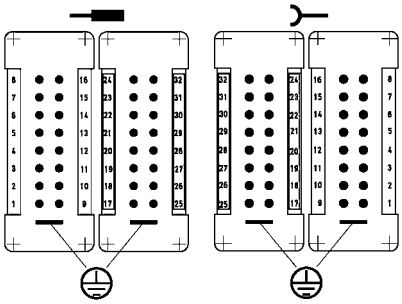

48-pole + ground

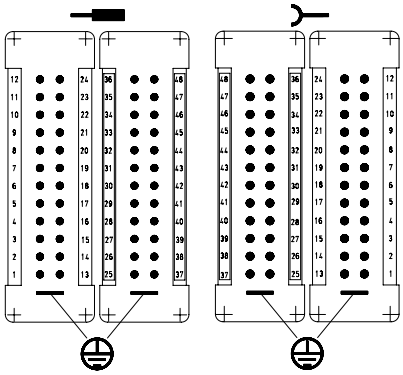

Derating curve

according to IEC 60512 sec. 3

revos BASIC
Spring version
500V / 16 A / 2.5 mm²

- 6-pole
- 10-pole
- 16-pole
- 24-pole

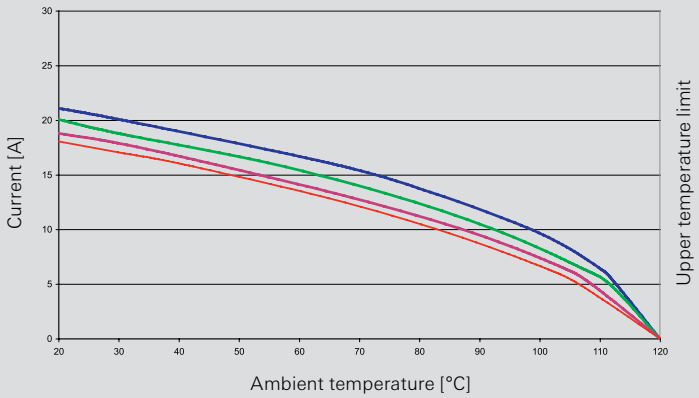

500 V contact inserts, double spring clamp connection

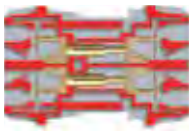

Contact inserts ***revos*** BASIC

6-pole + ground
Size 6H

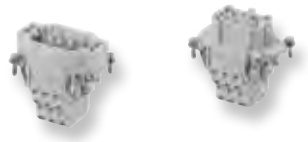

10-pole + ground
Size 10H

16-pole + ground
Size 16H

24-pole + ground
Size 24H

Description	Type	Part No.	P.U.
Contact inserts *revos* BASIC 500 V	**6-pole + ground**		
Male insert	BAS STM 6 2,5 50 AG	70.512.0653.0	1
Female insert	BAS BUM 6 2,5 50 AG	70.502.0653.0	1
Contact inserts *revos* BASIC 500 V	**10-pole + ground**		
Male insert	BAS STM 10 2,5 50 AG	70.512.1053.0	1
Female insert	BAS BUM 10 2,5 50 AG	70.502.1053.0	1
Contact inserts *revos* BASIC 500 V	**16-pole + ground**		
Male insert	BAS STM 16 2,5 50 AG	70.512.1653.0	1
Female insert	BAS BUM 16 2,5 50 AG	70.502.1653.0	1
Contact inserts *revos* BASIC 500 V	**24-pole + ground**		
Male insert	BAS STM 24 2,5 50 AG	70.512.2453.0	1
Female insert	BAS BUM 24 2,5 50 AG	70.502.2453.0	1

Technical data	
Rated voltage	500 V
Rated voltage according to UL/CSA	600 V
Rated impulse voltage	6 kV
Rated current	16 A
Rated current (cURus) 6-pole	13 A
Rated current (cURus) 10/16/24-pole	10 A
Degree of pollution	3
Rated cross section	
EN 60999	0.14 – 2.5 mm²
UL	26 – 14 AWG
CSA	26 – 14 AWG
Contacts	
Material	Copper alloy
Surface	Ag
Insulation strip length	9 – 11 mm
Contact resistance	≤ 3 mΩ
Mating cycles	500
Screws	head design / recomm. torque
Mounting screws	H1 / 0.5 – 0.7 Nm
Clamping screws	-
Ground conductor screws	H2 / 1.2 – 1.6 Nm
Temperature range	-40 … +120 °C

Description	Type	Part No.	P.U.
Accessories			
Screwdriver blade	DIN 5264 A 0,6 x 3,5	06.502.4000.0	5

Housing *revos* BASIC	Type	Page
Size	6H	120–121, 124–125, 190–191
Size	10H	128, 132, 138, 142, 190–191
Size	16H	146, 150, 156, 158, 159, 162, 190–191
Size	24H	166, 170, 176, 178, 179, 182

Dimensions

6-pole + ground – 24-pole + ground

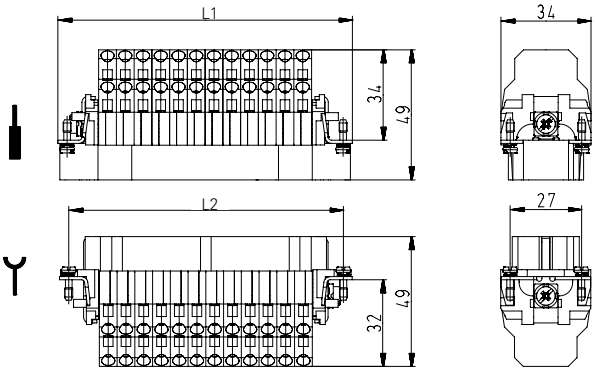

Number of poles	L1 [mm]	L2 [mm]
6	44.0	44.0
10	64.0	57.0
16	84.5	77.5
24	111.0	104.0

6-pole + ground

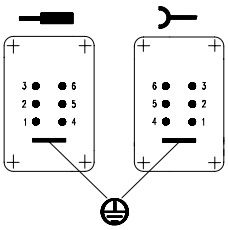

10-pole + ground

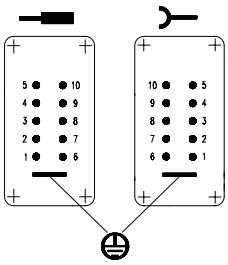

16-pole + ground

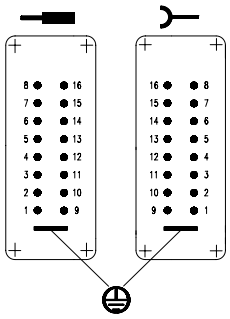

24-pole + ground

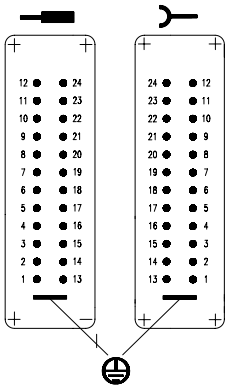

Derating curve

according to IEC 60512 sec. 3

revos BASIC

Spring version with double connection
500V / 16 A / 2.5 mm²

- 6-pole
- 10-pole
- 16-pole
- 24-pole

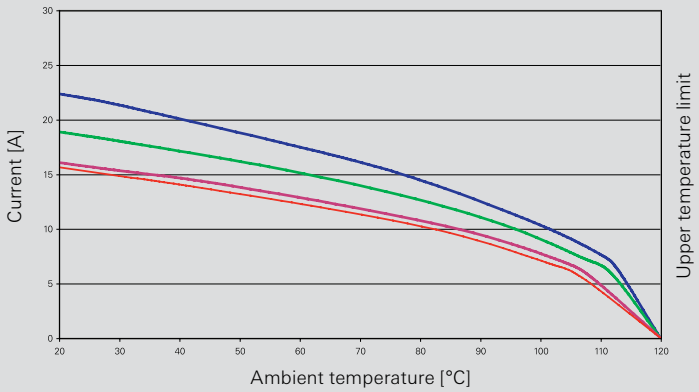

500 V contact inserts with push-in connection

Contact inserts *revos* BASIC

c UL us CSA pending

6-pole + ground
Size 6

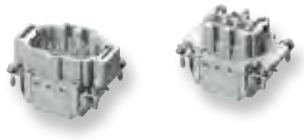

10-pole + ground
Size 10

16-pole + ground
Size 16

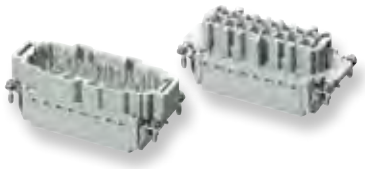

24-pole + ground
Size 24

Description	Type	Part No.	P.U.
Contact inserts *revos* BASIC 500 V	**6-pole + ground**		
Male insert	BAS STP 6 2,5 50 AG	70.415.0653.0	1
Female insert	BAS BUP 6 2,5 50 AG	70.405.0653.0	1
Contact inserts *revos* BASIC 500 V	**10-pole + ground**		
Male insert	BAS STP 10 2,5 50 AG	70.415.1053.0	1
Female insert	BAS BUP 10 2,5 50 AG	70.405.1053.0	1
Contact inserts *revos* BASIC 500 V	**16-pole + ground**		
Male insert	BAS STP 16 2,5 50 AG	70.415.1653.0	1
Female insert	BAS BUP 16 2,5 50 AG	70.405.1653.0	1
Contact inserts *revos* BASIC 500 V	**24-pole + ground**		
Male insert	BAS STP 24 2,5 50 AG	70.415.2453.0	1
Female insert	BAS BUP 24 2,5 50 AG	70.405.2453.0	1

Technical data	
Rated voltage	500 V
Rated voltage according to UL/CSA	600 V
Rated impulse voltage	6 kV
Rated current	16 A (UL, CSA 13 A)
Degree of pollution	3
Rated cross section	
EN 60999	0.14 – 2.5 mm^2
C-ULrec-US	14 AWG
	Can be used with solid wires and flexible wires with wire end sleeves
Contacts	
Material	Copper alloy
Surface	Ag
Insulation strip length	8 – 10 mm
Contact resistance	≤ 5 mΩ
Mating cycles	500
Screws	head design / recomm. torque
Mounting screws	H1 / 0.5 Nm
Clamping screws	-
Ground conductor screws	H2 / 1.2 Nm
Temperature range	-40 … +120 °C

Description	Type	Part No.	P.U.
Accessories			
Test plug	ST 2 / 2.3 ROT	Z5.553.2921.0	10

Housing *revos* BASIC / *revos* BASIC M	Type	Page
Size	6/6H	118–125, 190–191, 194, 196
Size	10/10H	126–143, 190-192, 198, 200
Size	16/16H	144–163, 190-191, 202, 204
Size	24/24H	164–183, 190-191, 206, 208

Dimensions

6-polig + PE – 24-polig + PE

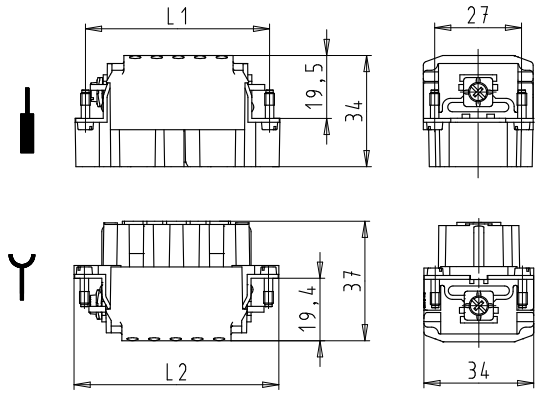

Number of poles	L1 [mm]	L2 [mm]
6	44.0	50.0
10	57.0	63.4
16	77.1	83.5
24	104.0	110.3

6-pole + ground

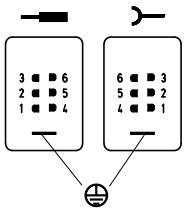

10-pole + ground

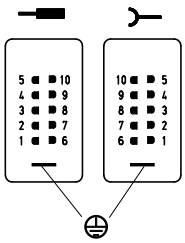

16-pole + ground

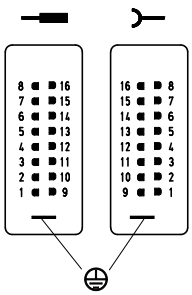

24-pole + ground

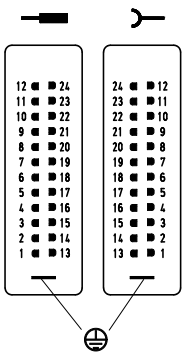

Derating curve

according to IEC 60512 sec. 3

revos BASIC
Push-in Connection

- 6-pole
- 10-pole
- 16-pole
- 24-pole

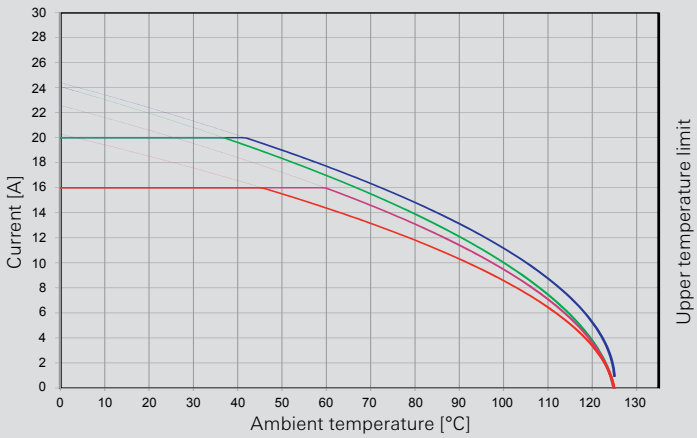

500 V contact inserts, crimp connection

Contact inserts *revos* BASIC

6-pole + ground
Size 6

10-pole + ground
Size 10

16-pole + ground
Size 16

24-pole + ground
Size 24

32-pole + ground
Size 32

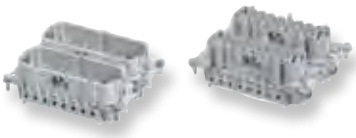

48-pole + ground
Size 48

Description	Type	Part No.	P.U.
Contact inserts *revos* BASIC 500 V	**6-pole + ground**		
Male insert	BAS STC 6 50	70.710.0658.0	10
Female insert	BAS BUC 6 50	70.700.0658.0	10
Contact inserts *revos* BASIC 500 V	**10-pole + ground**		
Male insert	BAS STC 10 50	70.710.1058.0	10
Female insert	BAS BUC 10 50	70.700.1058.0	10
Contact inserts *revos* BASIC 500 V	**16-pole + ground**		
Male insert	BAS STC 16 50	70.710.1658.0	10
Female insert	BAS BUC 16 50	70.700.1658.0	10
Contact inserts *revos* BASIC 500 V	**24-pole + ground**		
Male insert	BAS STC 24 50	70.710.2458.0	10
Female insert	BAS BUC 24 50	70.700.2458.0	10
Contact inserts *revos* BASIC 500 V	**32-pole + ground**		
Male insert, marked 1-16, 17-32	BAS STC 32 50	70.710.3253.0	5
Female insert, marked 1-16, 17-32	BAS BUC 32 50	70.700.3253.0	5
Contact inserts *revos* BASIC 500 V	**48-pole + ground**		
Male insert, marked 1-24, 25-48	BAS STC 48 50	70.710.4858.0	5
Female insert, marked 1-24, 25-48	BAS BUC 48 50	70.700.4858.0	5
Contacts for crimp connection	mm² / AWG		
Male insert	0.5 / 20	05.543.70xx.0	200
Female insert	0.5 / 20	02.123.70xx.0	200
Male insert	0.75 – 1 / 18	05.543.71xx.0	200
Female insert	0.75 – 1 / 18	02.123.71xx.0	200
Male insert	1.5 / 16	05.543.72xx.0	200
Female insert	1.5 / 16	02.123.72xx.0	200
Male insert	2.5 / 14	05.543.73xx.0	200
Female insert	2.5 / 14	02.123.73xx.0	200
Male insert	4 / 12	05.543.74xx.0	200
Female insert	4 / 12	02.123.74xx.0	200
Surface	tin-plated xx = 21 / silver-plated xx = 02 / gold-plated xx = 01		

Technical data	
Rated voltage	500 V
Rated voltage according to UL/CSA	600 V
Rated impulse voltage	6 kV
Rated current	16 A
Degree of pollution	3
Rated cross section	
EN 60999	0.5 – 4 mm²
UL	20 – 12 AWG
CSA	20 – 12 AWG
Contacts	
Material	Copper alloy
Surface	Sn, Ag, Au
Insulation strip length	7 mm
Contact resistance	≤ 1,5 mΩ
Mating cycles	Sn 200 / Ag, Au 500
Screws	head design / recomm. torque
Mounting screws	H1 / 0.5 – 0.7 Nm
Clamping screws	-
Ground conductor screws	H2 / 1.2 – 1.6 Nm
Temperature range	-40 … +120 °C

Description	Type	Part No.	P.U.
Accessories			
Crimping tool		95.101.0800.0	1
Crimping die	"B"	05.502.2100.0	1
Contact positioner	"3"	05.502.3300.0	1
Extraction tool		05.502.3500.0	1

Housing *revos* BASIC / *revos* BASIC M	Type	Page
Size	6/6H	118–125, 190–191, 194, 196
Size	10/10H	126–143, 190-192, 198, 200
Size	16/16H	144–163, 190-191, 202, 204
Size	24/24H	164–183, 190-191, 206, 208
Size	32	184–185
Size	48	186–189

Dimensions

6-pole + ground – 24-pole + ground

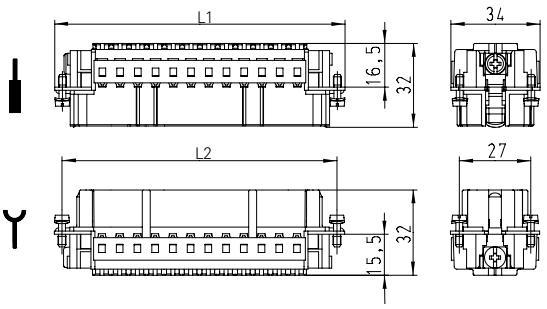

Number of poles	L1 [mm]	L2 [mm]
6	50.0	44.0
10	63.0	57.0
16	83.0	77.5
24	110.0	104.0

6-pole + ground

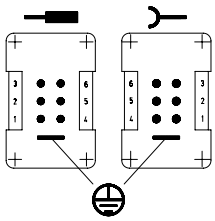

10-pole + ground

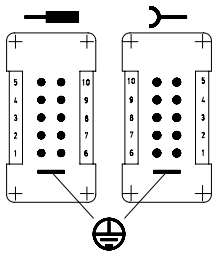

16-pole + ground

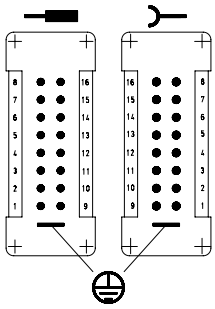

24-pole + ground

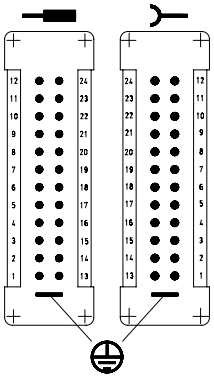

32-pole + ground

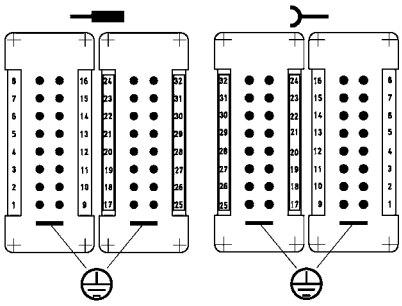

48-pole + ground

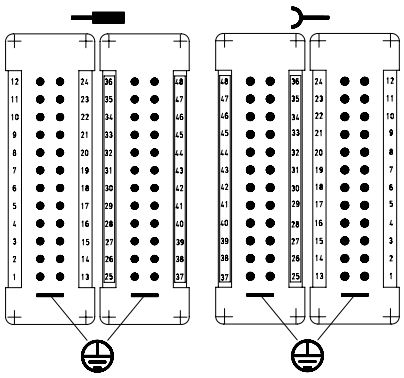

Derating curve according to IEC 60512 sec. 3

revos BASIC crimp version 500V / 16 A / 1.5 mm²

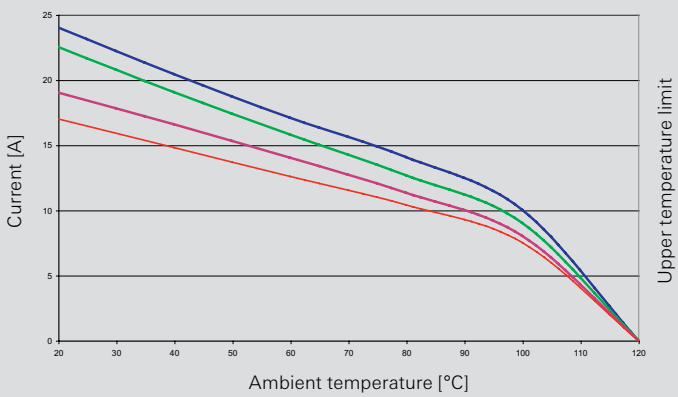

Derating curve according to IEC 60512 sec. 3

revos BASIC crimp version 500V / 16 A / 2.5 mm²

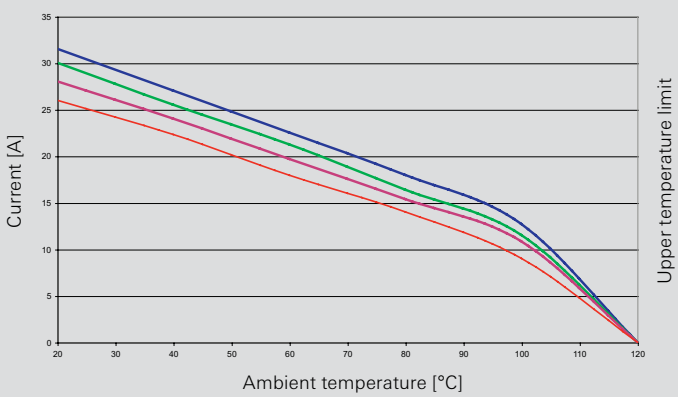

6-pole 10-pole 16-pole 24-pole

500 V contact inserts with crimp connection

Contact inserts ***revos*** BASIC EE

10-pole + ground
Size 6/6H

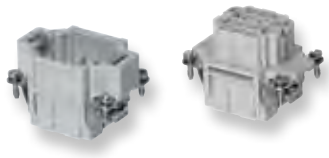

18-pole + ground
Size 10/10H

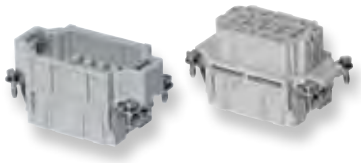

32-pole + ground
Size 16/16H

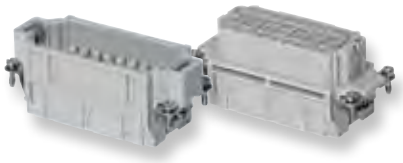

46-pole + ground
Size 24/24H

Description	Type	Part No.	P.U.
Contact inserts *revos* BASIC EE 500 V	**10-pole + ground**		
Male insert	BAS STCK 10 50	70.810.1056.0	5
Female insert	BAS BUCK 10 50	70.800.1056.0	5
Contact inserts *revos* BASIC EE 500 V	**18-pole + ground**		
Male insert	BAS STCK 18 50	70.810.1856.0	5
Female insert	BAS BUCK 18 50	70.800.1856.0	5
Contact inserts *revos* BASIC EE 500 V	**32-pole + ground**		
Male insert	BAS STCK 32 50	70.810.3256.0	5
Female insert	BAS BUCK 32 50	70.800.3256.0	5
Contact inserts *revos* BASIC EE 500 V	**46-pole + ground**		
Male insert	BAS STCK 46 50	70.810.4656.0	10
Female insert	BAS BUCK 46 50	70.800.4656.0	10
Contacts for crimp connection	mm² / AWG		
Male insert	0.5 / 20	05.543.70xx.0	200
Female insert	0.5 / 20	02.123.70xx.0	200
Male insert	0.75 – 1 / 18	05.543.71xx.0	200
Female insert	0.75 – 1 / 18	02.123.71xx.0	200
Male insert	1.5 / 16	05.543.72xx.0	200
Female insert	1.5 / 16	02.123.72xx.0	200
Male insert	2.5 / 14	05.543.73xx.0	200
Female insert	2.5 / 14	02.123.73xx.0	200
Male insert	4 / 12	05.543.74xx.0	200
Female insert	4 / 12	02.123.74xx.0	200
Surface	silver-plated xx = 02 / gold-plated xx = 01		

Technical data	
Rated voltage	500 V
Rated voltage according to UL/CSA	600 V
Rated impulse voltage	6 kV
Rated current	16 A
Degree of pollution	3
Rated cross section	
EN 60999	0.5 – 4 mm²
UL	20 – 12 AWG
CSA	20 – 12 AWG
Contacts	
Material	Copper alloy
Surface	Ag, Au
Insulation strip length	7 mm
Contact resistance	≤ 1.5 mΩ
Mating cycles	Sn 200 / Ag, Au 500
Screws	head design / recomm. torque
Mounting screws	H1 / 0.5 – 0.7 Nm
Clamping screws	-
Ground conductor screws	H2 / 1.2 – 1.6 Nm
Temperature range	-40 … +120 °C

Description	Type	Part No.	P.U.
Accessories			
Crimping tool		95.101.0800.0	1
Crimping die	"B"	05.502.2100.0	1
Contact positioner	"3"	05.502.3300.0	1
Extraction tool		05.502.3500.0	1

Housing *revos* BASIC / *revos* BASIC M	Type	Page
Size	6/6H	118–125, 190–191, 194, 196
Size	10/10H	126–143, 190-192, 198, 200
Size	16/16H	144–163, 190-191, 202, 204
Size	24/24H	164–183, 190-191, 206, 208

Dimensions

10-pole + ground – 46-pole + ground

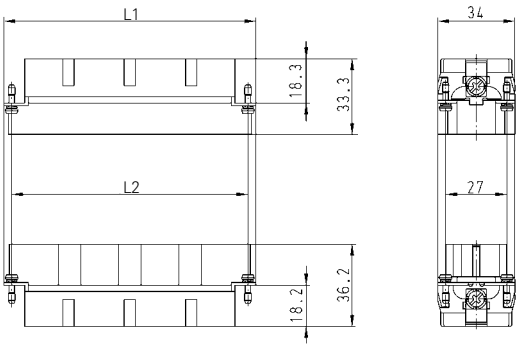

Number of poles	L1 [mm]	L2 [mm]
10	44.0	44.0
18	64.0	57.0
32	84.5	77.5
46	111.0	104.0

10-pole + ground

Connection side

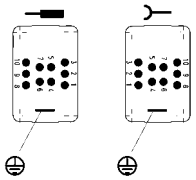

Cut-out

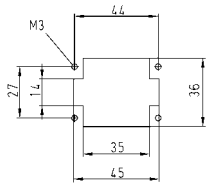

18-pole + ground

Connection side

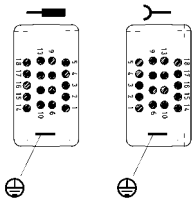

Cut-out

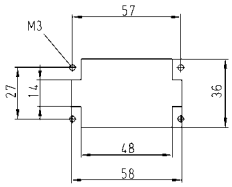

32-pole + ground

Connection side

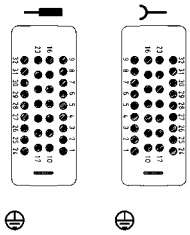

Cut-out

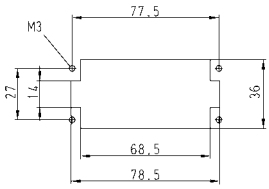

46-pole + ground

Connection side

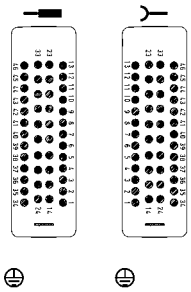

Cut-out

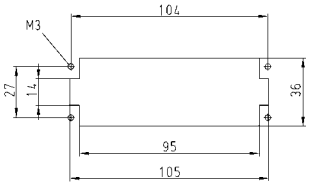

Derating curve according to IEC 60512 sec. 3

revos BASIC EE 500V / 16 A / 1.5 mm²

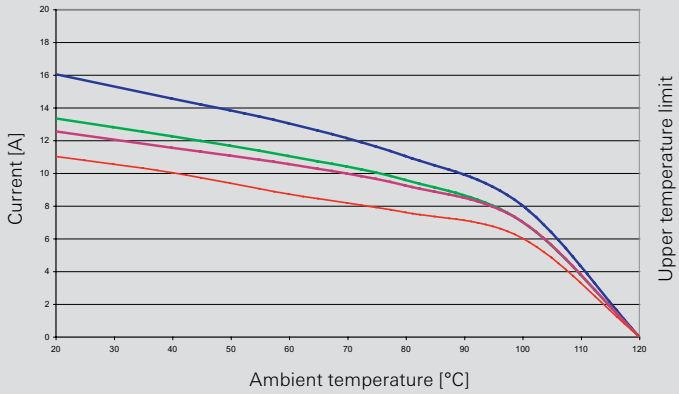

Derating curve according to IEC 60512 sec. 3

revos BASIC EE 500V / 16 A / 2.5 mm²

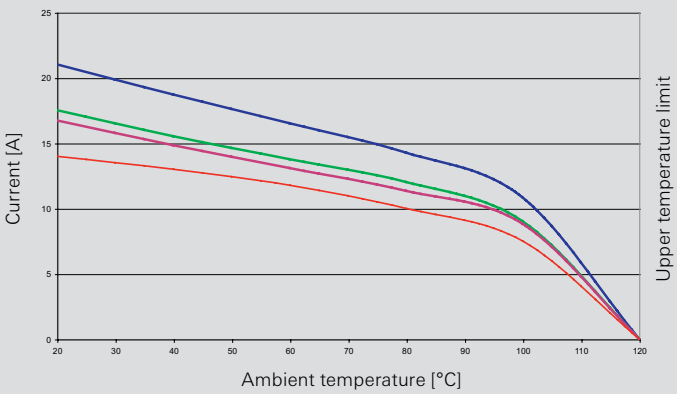

10-pole 18-pole 32-pole 46-pole

500 V multipole adapter with screw connection

Multipole adapter *revos* BASIC

6-pole + ground
Size 6

10-pole + ground
Size 10

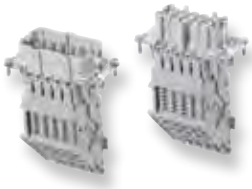

16-pole + ground
Size 16

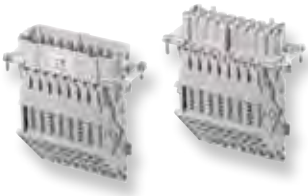

24-pole + ground
Size 24

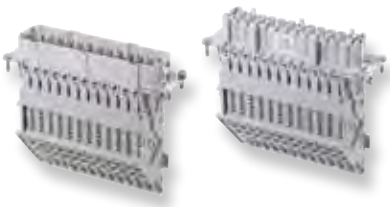

Description	Type	Part No.	P.U.
Multipole adapter *revos* BASIC 500 V	**6-pole + ground**		
Long design (6 marking fields)			
Male insert, ground right	BAS SAS LR 6 4,0 50	70.115.0653.3	10
Female insert, ground right	BAS BAS LR 6 4,0 50	70.105.0653.3	10
Male insert, ground left	BAS SAS LL 6 4,0 50	70.110.0653.3	10
Female insert, ground left	BAS BAS LL 6 4,0 50	70.100.0653.3	10
Short design (4 marking fields)			
Male insert, ground right	BAS SAS KR 6 4,0 50	70.115.0653.4	10
Female insert, ground right	BAS BAS KR 6 4,0 50	70.105.0653.4	10
Male insert, ground left	BAS SAS KL 6 4,0 50	70.110.0653.4	10
Female insert, ground left	BAS BAS KL 6 4,0 50	70.100.0653.4	10
Multipole adapter *revos* BASIC 500 V	**10-pole + ground**		
Long design (6 marking fields)			
Male insert, ground right	BAS SAS LR 10 4,0 50	70.115.1053.3	10
Female insert, ground right	BAS BAS LR 10 4,0 50	70.105.1053.3	10
Male insert, ground left	BAS SAS LL 10 4,0 50	70.110.1053.3	10
Female insert, ground left	BAS BAS LL 10 4,0 50	70.100.1053.3	10
Short design (4 marking fields)			
Male insert, ground right	BAS SAS KR 10 4,0 50	70.115.1053.4	10
Female insert, ground right	BAS BAS KR 10 4,0 50	70.105.1053.4	10
Male insert, ground left	BAS SAS KL 10 4,0 50	70.110.1053.4	10
Female insert, ground left	BAS BAS KL 10 4,0 50	70.100.1053.4	10
Multipole adapter *revos* BASIC 500 V	**16-pole + ground**		
Long design (6 marking fields)			
Male insert, ground right	BAS SAS LR 16 4,0 50	70.115.1653.3	10
Female insert, ground right	BAS BAS LR 16 4,0 50	70.105.1653.3	10
Male insert, ground left	BAS SAS LL 16 4,0 50	70.110.1653.3	10
Female insert, ground left	BAS BAS LL 16 4,0 50	70.100.1653.3	10
Short design (4 marking fields)			
Male insert, ground right	BAS SAS KR 16 4,0 50	70.115.1653.4	10
Female insert, ground right	BAS BAS KR 16 4,0 50	70.105.1653.4	10
Male insert, ground left	BAS SAS KL 16 4,0 50	70.110.1653.4	10
Female insert, ground left	BAS BAS KL 16 4,0 50	70.100.1653.4	10
Multipole adapter *revos* BASIC 500 V	**24-pole + ground**		
Long design (6 marking fields)			
Male insert, ground right	BAS SAS LR 24 4,0 50	70.115.2453.3	10
Female insert, ground right	BAS BAS LR 24 4,0 50	70.105.2453.3	10
Male insert, ground left	BAS SAS LL 24 4,0 50	70.110.2453.3	10
Female insert, ground left	BAS BAS LL 24 4,0 50	70.100.2453.3	10
Short design (4 marking fields)			
Male insert, ground right	BAS SAS KR 24 4,0 50	70.115.2453.4	10
Female insert, ground right	BAS BAS KR 24 4,0 50	70.105.2453.4	10
Male insert, ground left	BAS SAS KL 24 4,0 50	70.110.2453.4	10
Female insert, ground left	BAS BAS KL 24 4,0 50	70.100.2453.4	10

Technical data	
Rated voltage	500 V
Rated voltage according to UL/CSA	600 V
Rated impulse voltage	6 kV
Rated current	16 A
Degree of pollution	3
Rated cross section	
EN 60999	0.5 – 4 mm²
UL	20 – 12 AWG
CSA	20 – 12 AWG
Contacts	
Material	Copper alloy
Surface	Sn
Insulation strip length	12 mm
Contact resistance	≤ 3 mΩ
Mating cycles	200
Screws	head design / recomm. torque
Mounting screws	H1 / 0.5 – 0.7 Nm
Clamping screws	M3 / 0.5 – 0.7 Nm
Ground conductor screws	H2 / 1.2 – 1.6 Nm
Temperature range	-40 … +120 °C

Open-bottom base *revos* BASIC	Type	Page
Size	6	122, 196
Size	10	130, 140, 200
Size	16	148, 160, 204
Size	24	168, 180, 208

Dimensions

6-pole + ground

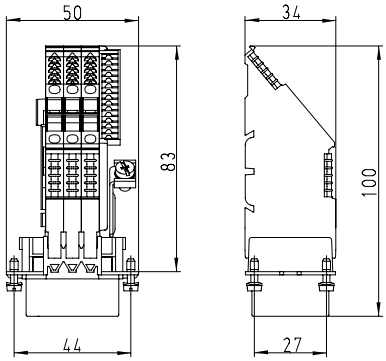

Long design

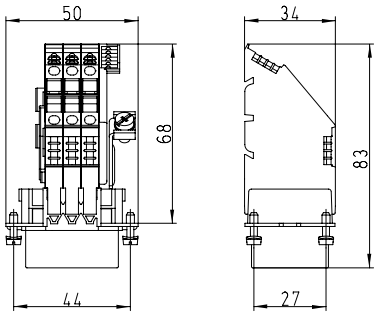

Short design

10-pole + ground

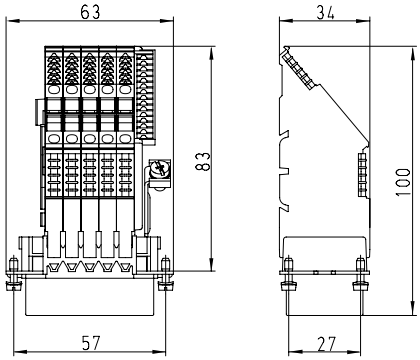

Long design

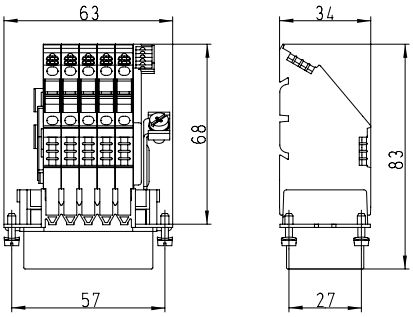

Short design

16-pole + ground

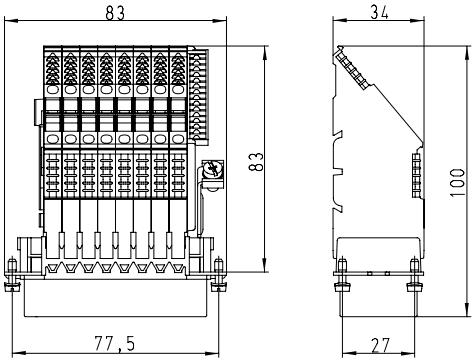

Long design

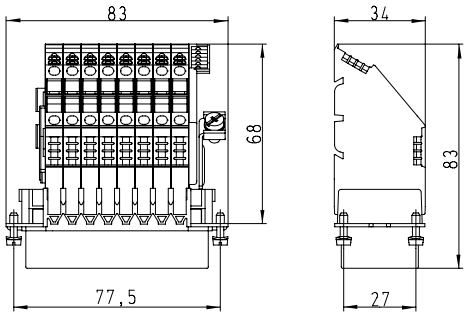

Short design

24-pole + ground

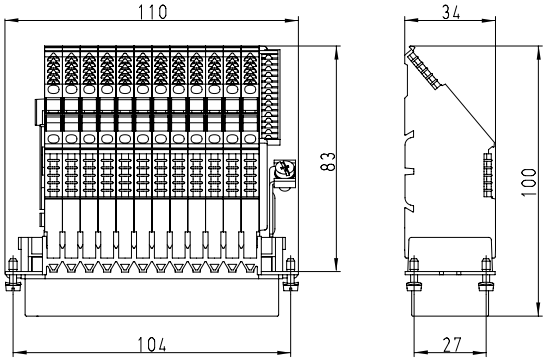

Long design

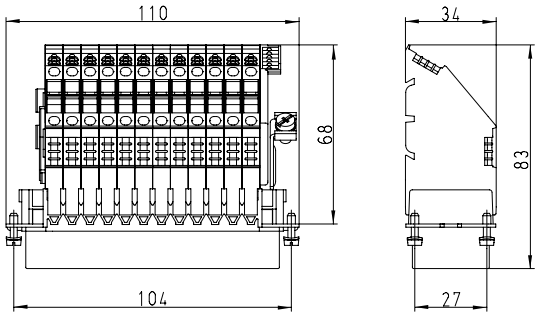

Short design

500 V multipole adapter with screw connection Sets of 2 components with Bottom base, Single locking lever

Multipole adapter *revos* BASIC + Bottom base with single locking lever

6-pole + ground
Size 6

10-pole + ground
Size 10

16-pole + ground
Size 16

24-pole + ground
Size 24

Description	Type	Part No.	P.U.
Multipole adapter *revos* BASIC 500 V	**6-pole + ground**		
Long design (6 marking fields)			
Male insert, ground right	BAS GAESHRS 6 4,0 50	70.955.0653.3	10
Female insert, ground right	BAS GAESHRB 6 4,0 50	70.945.0653.3	10
Male insert, ground left	BAS GAESHLS 6 4,0 50	70.950.0653.3	10
Female insert, ground left	BAS GAESHLB 6 4,0 50	70.940.0653.3	10
Short design (4 marking fields)			
Male insert, ground right	BAS GAESNRS 6 4,0 50	70.955.0653.4	10
Female insert, ground right	BAS GAESNRB 6 4,0 50	70.945.0653.4	10
Male insert, ground left	BAS GAESNLS 6 4,0 50	70.950.0653.4	10
Female insert, ground left	BAS GAESNLB 6 4,0 50	70.940.0653.4	10
Multipole adapter *revos* BASIC 500 V	**10-pole + ground**		
Long design (6 marking fields)			
Male insert, ground right	BAS GAESHRS 10 4,0 50	71.955.1053.3	10
Female insert, ground right	BAS GAESHRB 10 4,0 50	71.945.1053.3	10
Male insert, ground left	BAS GAESHLS 10 4,0 50	71.950.1053.3	10
Female insert, ground left	BAS GAESHLB 10 4,0 50	71.940.1053.3	10
Short design (4 marking fields)			
Male insert, ground right	BAS GAESNRS 10 4,0 50	71.955.1053.4	10
Female insert, ground right	BAS GAESNRB 10 4,0 50	71.945.1053.4	10
Male insert, ground left	BAS GAESNLS 10 4,0 50	71.950.1053.4	10
Female insert, ground left	BAS GAESNLB 10 4,0 50	71.940.1053.4	10
Multipole adapter *revos* BASIC 500 V	**16-pole + ground**		
Long design (6 marking fields)			
Male insert, ground right	BAS GAESHRS 16 4,0 50	71.955.1653.3	10
Female insert, ground right	BAS GAESHRB 16 4,0 50	71.945.1653.3	10
Male insert, ground left	BAS GAESHLS 16 4,0 50	71.950.1653.3	10
Female insert, ground left	BAS GAESHLB 16 4,0 50	71.940.1653.3	10
Short design (4 marking fields)			
Male insert, ground right	BAS GAESNRS 16 4,0 50	71.955.1653.4	10
Female insert, ground right	BAS GAESNRB 16 4,0 50	71.945.1653.4	10
Male insert, ground left	BAS GAESNLS 16 4,0 50	71.950.1653.4	10
Female insert, ground left	BAS GAESNLB 16 4,0 50	71.940.1653.4	10
Multipole adapter *revos* BASIC 500 V	**24-pole + ground**		
Long design (6 marking fields)			
Male insert, ground right	BAS GAESHRS 24 4,0 50	71.955.2453.3	10
Female insert, ground right	BAS GAESHRB 24 4,0 50	71.945.2453.3	10
Male insert, ground left	BAS GAESHLS 24 4,0 50	71.950.2453.3	10
Female insert, ground left	BAS GAESHLB 24 4,0 50	71.940.2453.3	10
Short design (4 marking fields)			
Male insert, ground right	BAS GAESNRS 24 4,0 50	71.955.2453.4	10
Female insert, ground right	BAS GAESNRB 24 4,0 50	71.945.2453.4	10
Male insert, ground left	BAS GAESNLS 24 4,0 50	71.950.2453.4	10
Female insert, ground left	BAS GAESNLB 24 4,0 50	71.940.2453.4	10

Technical data	
Rated voltage	500 V
Rated voltage according to UL/CSA	600 V
Rated impulse voltage	6 kV
Rated current	16 A
Degree of pollution	3
Rated cross section	
EN 60999	0.5 – 4 mm²
UL	20 – 12 AWG
CSA	20 – 12 AWG
Contacts	
Material	Copper alloy
Surface	Sn
Insulation strip length	12 mm
Contact resistance	≤ 3 mΩ
Mating cycles	200
Screws	head design / recomm. torque
Mounting screws	H1 / 0.5 – 0.7 Nm
Clamping screws	M3 / 0.5 – 0.7 Nm
Ground conductor screws	H2 / 1.2 – 1.6 Nm
Temperature range	-40 … +120 °C

These multipole adapters can be mounted inside the control cabinet.
Please use the version B coding accessory.
Coding accessories can be found on page 252–255.

Dimensions

6-pole + ground

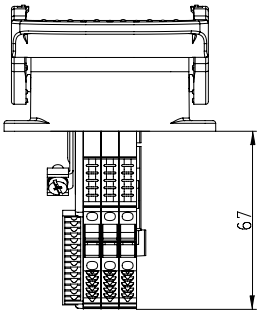

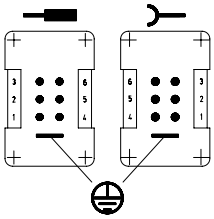

Long design

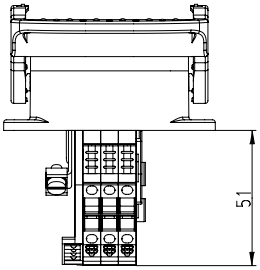

Short design

10-pole + ground

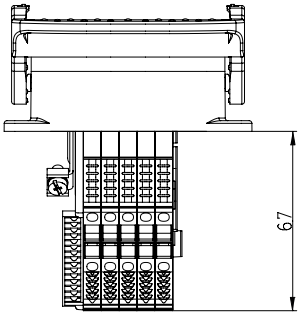

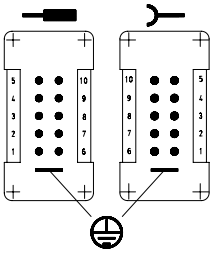

Long design

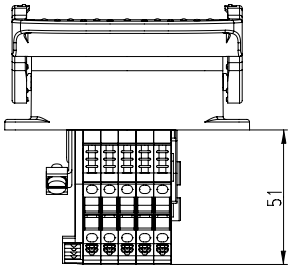

Short design

16-pole + ground

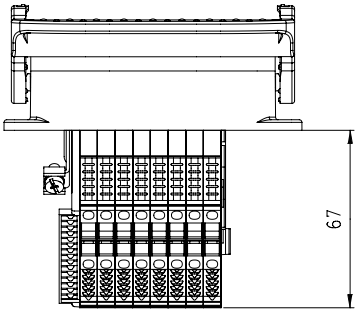

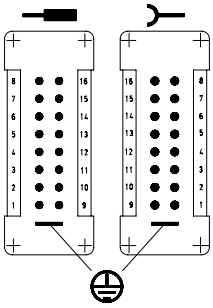

Long design

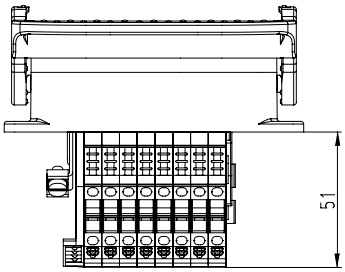

Short design

24-pole + ground

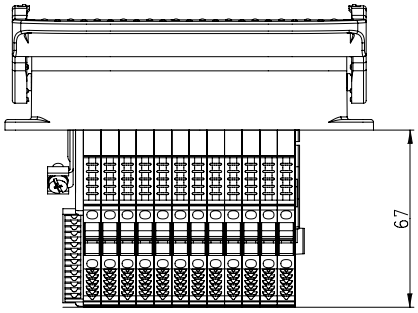

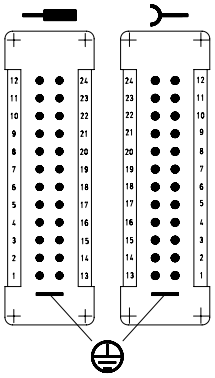

Long design

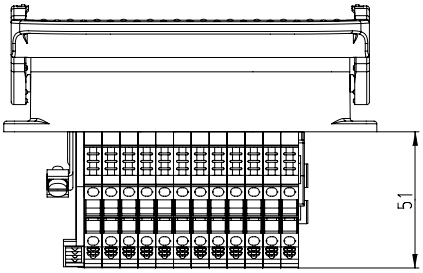

Short design

500 V multipole adapter with screw connection Sets of 2 components with Bottom base, Double locking lever

Multipole adapter *revos* BASIC + Bottom base with double locking lever

10-pole + ground
Size 10

16-pole + ground
Size 16

24-pole + ground
Size 24

Description	Type	Part No.	P.U.
Multipole adapter *revos* BASIC 500 V	**10-pole + ground**		
Long design (6 marking fields)			
Male insert, ground right	BAS GAZSHRS 10 4,0 50	70.955.1053.3	10
Female insert, ground right	BAS GAZSHRB 10 4,0 50	70.945.1053.3	10
Male insert, ground left	BAS GAZSHLS 10 4,0 50	70.950.1053.3	10
Female insert, ground left	BAS GAZSHLB 10 4,0 50	70.940.1053.3	10
Short design (4 marking fields)			
Male insert, ground right	BAS GAZSNRS 10 4,0 50	70.955.1053.4	10
Female insert, ground right	BAS GAZSNRB 10 4,0 50	70.945.1053.4	10
Male insert, ground left	BAS GAZSNLS 10 4,0 50	70.950.1053.4	10
Female insert, ground left	BAS GAZSNLB 10 4,0 50	70.940.1053.4	10
Multipole adapter *revos* BASIC 500 V	**16-pole + ground**		
Long design (6 marking fields)			
Male insert, ground right	BAS GAZSHRS 16 4,0 50	70.955.1653.3	10
Female insert, ground right	BAS GAZSHRB 16 4,0 50	70.945.1653.3	10
Male insert, ground left	BAS GAZSHLS 16 4,0 50	70.950.1653.3	10
Female insert, ground left	BAS GAZSHLB 16 4,0 50	70.940.1653.3	10
Short design (4 marking fields)			
Male insert, ground right	BAS GAZSNRS 16 4,0 50	70.955.1653.4	10
Female insert, ground right	BAS GAZSNRB 16 4,0 50	70.945.1653.4	10
Male insert, ground left	BAS GAZSNLS 16 4,0 50	70.950.1653.4	10
Female insert, ground left	BAS GAZSNLB 16 4,0 50	70.940.1653.4	10
Multipole adapter *revos* BASIC 500 V	**24-pole + ground**		
Long design (6 marking fields)			
Male insert, ground right	BAS GAZSHRS 24 4,0 50	70.955.2453.3	10
Female insert, ground right	BAS GAZSHRB 24 4,0 50	70.945.2453.3	10
Male insert, ground left	BAS GAZSHLS 24 4,0 50	70.950.2453.3	10
Female insert, ground left	BAS GAZSHLB 24 4,0 50	70.940.2453.3	10
Short design (4 marking fields)			
Male insert, ground right	BAS GAZSNRS 24 4,0 50	70.955.2453.4	10
Female insert, ground right	BAS GAZSNRB 24 4,0 50	70.945.2453.4	10
Male insert, ground left	BAS GAZSNLS 24 4,0 50	70.950.2453.4	10
Female insert, ground left	BAS GAZSNLB 24 4,0 50	70.940.2453.4	10

Technical data	
Rated voltage	500 V
Rated voltage according to UL/CSA	600 V
Rated impulse voltage	6 kV
Rated current	16 A
Degree of pollution	3
Rated cross section	
EN 60999	0.5 – 4 mm²
UL	20 – 12 AWG
CSA	20 – 12 AWG
Contacts	
Material	Copper alloy
Surface	Sn
Insulation strip length	12 mm
Contact resistance	≤ 3 mΩ
Mating cycles	200
Screws	head design / recomm. torque
Mounting screws	H1 / 0.5 – 0.7 Nm
Clamping screws	M3 / 0.5 – 0.7 Nm
Ground conductor screws	H2 / 1.2 – 1.6 Nm
Temperature range	-40 … +120 °C

These multipole adapters can be mounted inside the control cabinet.
Please use the version B coding accessory.
Coding accessories can be found on page 252–255.

Dimensions

10-pole + ground

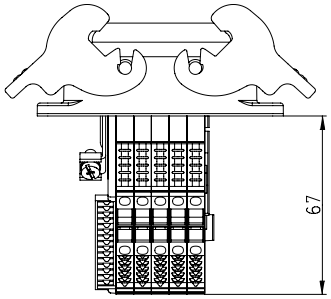

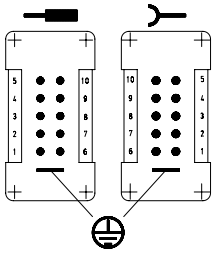

Long design

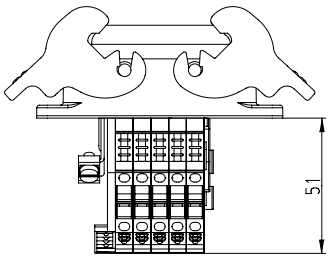

Short design

16-pole + ground

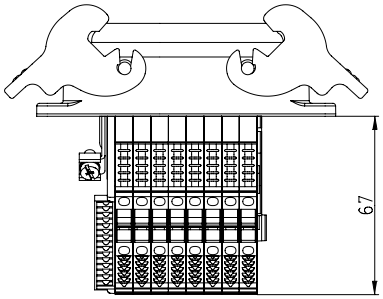

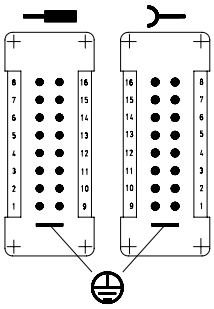

Long design

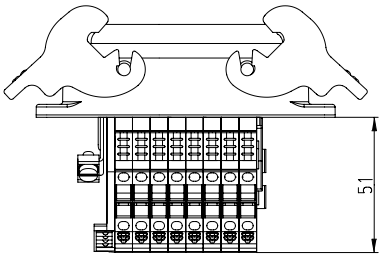

Short design

24-pole + ground

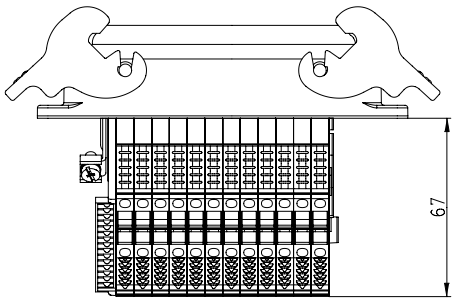

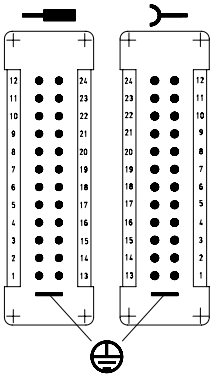

Long design

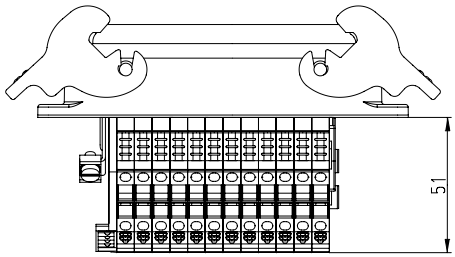

Short design

500 V multipole adapter with spring clamp connection

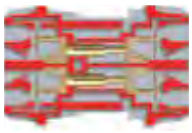

Multipole adapter ***revos*** BASIC

6-pole + ground
Size 6

10-pole + ground
Size 10

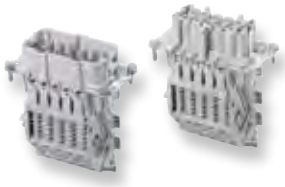

16-pole + ground
Size 16

24-pole + ground
Size 24

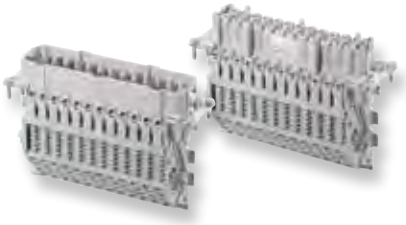

Description	Type	Part No.	P.U.
Multipole adapter *revos* BASIC 500 V	**6-pole + ground**		
Short design (6 marking fields)			
Male insert, ground right	BAS SAF KR 6 2,5 50	70.116.0653.0	10
Female insert, ground right	BAS BAF KR 6 2,5 50	70.106.0653.0	10
Male insert, ground left	BAS SAF KL 6 2,5 50	70.111.0653.0	10
Female insert, ground left	BAS BAF KL 6 2,5 50	70.101.0653.0	10
Multipole adapter *revos* BASIC 500 V	**10-pole + ground**		
Short design (6 marking fields)			
Male insert, ground right	BAS SAF KR 10 2,5 50	70.116.1053.0	10
Female insert, ground right	BAS BAF KR 10 2,5 50	70.106.1053.0	10
Male insert, ground left	BAS SAF KL 10 2,5 50	70.111.1053.0	10
Female insert, ground left	BAS BAF KL 10 2,5 50	70.101.1053.0	10
Multipole adapter *revos* BASIC 500 V	**16-pole + ground**		
Short design (6 marking fields)			
Male insert, ground right	BAS SAF KR 16 2,5 50	70.116.1653.0	10
Female insert, ground right	BAS BAF KR 16 2,5 50	70.106.1653.0	10
Male insert, ground left	BAS SAF KL 16 2,5 50	70.111.1653.0	10
Female insert, ground left	BAS BAF KL 16 2,5 50	70.101.1653.0	10
Multipole adapter *revos* BASIC 500 V	**24-pole + ground**		
Short design (6 marking fields)			
Male insert, ground right	BAS SAF KR 24 2,5 50	70.116.2453.0	10
Female insert, ground right	BAS BAF KR 24 2,5 50	70.106.2453.0	10
Male insert, ground left	BAS SAF KL 24 2,5 50	70.111.2453.0	10
Female insert, ground left	BAS BAF KL 24 2,5 50	70.101.2453.0	10

Technical data	
Rated voltage	500 V
Rated voltage according to UL/CSA	600 V
Rated impulse voltage	6 kV
Rated current	16 A
Degree of pollution	3
Rated cross section	
EN 60999	0.5 – 2.5 mm^2
UL	20 – 12 AWG
CSA	20 – 12 AWG
Contacts	
Material	Copper alloy
Surface	Sn
Insulation strip length	9 mm
Contact resistance	≤ 3 mΩ
Mating cycles	200
Screws	head design / recomm. torque
Mounting screws	H1 / 0.5 – 0.7 Nm
Clamping screws	-
Ground conductor screws	H2 / 1.2 – 1.6 Nm
Temperature range	-40 … +120 °C

Description	Type	Part No.	P.U.
Accessories			
Screwdriver blade	DIN 5264 A 0,6 x 3,5	06.502.4000.0	5

Open-bottom base *revos* BASIC	Type	Page
Size	6	122, 196
Size	10	130, 140, 200
Size	16	148, 160, 204
Size	24	168, 180, 208

Dimensions

6-pole + ground

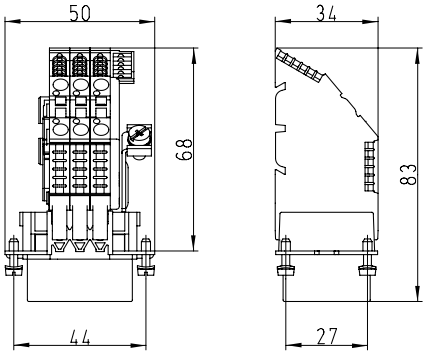

10-pole + ground

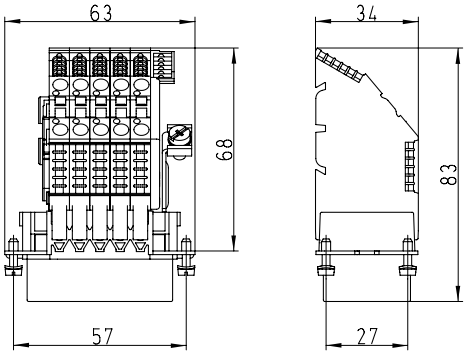

16-pole + ground

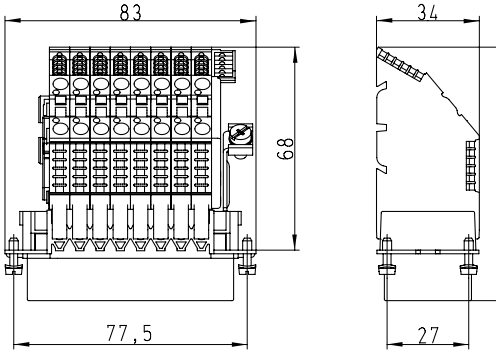

24-pole + ground

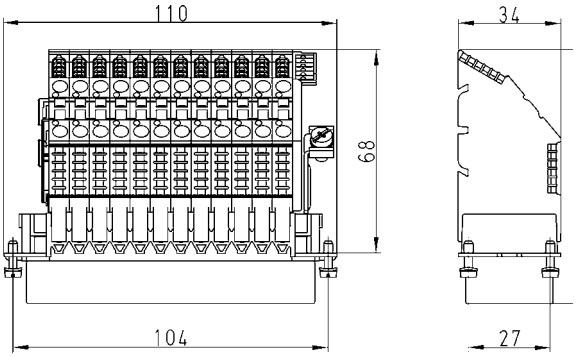

400/690 V contact inserts, screw connection

Contact inserts ***revos*** BASIC

3-pole + 2 switching contacts + ground, Size 10

6-pole + 2 switching contacts + ground, Size 16

10-pole + 2 switching contacts + ground, Size 24

16-pole + 2 switching contacts + ground, Size 24

Description	Type	Part No.	P.U.
Contact inserts *revos* BASIC 400/690 V	**3-pole + ground**		
Male insert	BAS STS 3 2,5 64	70.410.0340.0	10
Female insert	BAS BUS 3 2,5 64	70.400.0340.0	10
Contact inserts *revos* BASIC 400/690 V	**6-pole + ground**		
Male insert	BAS STS 6 2,5 64	70.410.0640.0	10
Female insert	BAS BUS 6 2,5 64	70.400.0640.0	10
Contact inserts *revos* BASIC 400/690 V	**10-pole + ground**		
Male insert	BAS STS 10 2,5 64	70.410.1040.0	10
Female insert	BAS BUS 10 2,5 64	70.400.1040.0	10
Contact inserts *revos* BASIC 400/690 V	**16-pole + ground**		
Male insert	BAS STS 16 2,5 64	70.410.1640.0	10
Female insert	BAS BUS 16 2,5 64	70.400.1640.0	10

Technical data	
Rated voltage	L-PE 400 V / L-L 690 V
Rated voltage according to UL/CSA	600 V
Rated impulse voltage	6 kV
Rated current	16 A
Degree of pollution	3
Rated cross section	
EN 60999	0.5 – 2.5 mm²
UL	20 – 12 AWG
CSA	20 – 12 AWG
Contacts	
Material	Copper alloy
Surface	Sn
Insulation strip length	7 mm
Contact resistance	≤ 1.5 mΩ
Mating cycles	200
Screws	head design / recomm. torque
Mounting screws	H1 / 0.5 – 0.7 Nm
Clamping screws	H1 / 0.5 – 0.7 Nm
Ground conductor screws	H2 / 1.2 – 1.6 Nm
Temperature range	-40 … +120 °C

Housing *revos* BASIC / *revos* BASIC M	Type	Page
Housing Size	10/10H	118–125, 190–191, 194, 196
Housing Size	16/16H	126–143, 190-192, 198, 200
Housing Size	24/24H	144–163, 190-191, 202, 204

Dimensions

3-pole + ground – 16-pole + ground

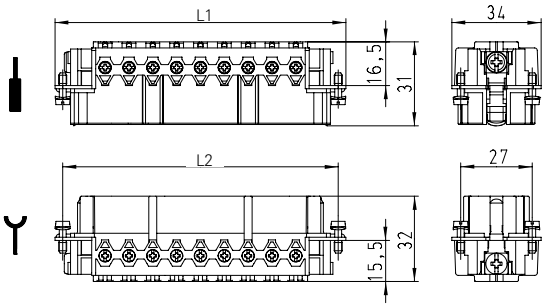

Number of poles	L1 [mm]	L2 [mm]
3	63.0	57.0
6	83.0	77.5
10	110.0	104.0
16	110.0	104.0

3-pole + ground

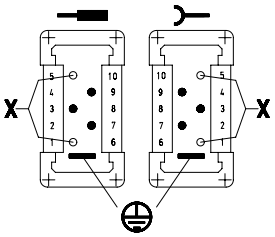

6-pole + ground

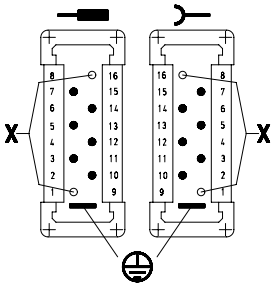

10-pole + ground

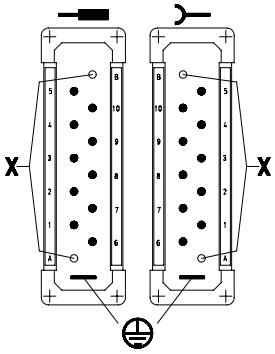

16-pole + ground

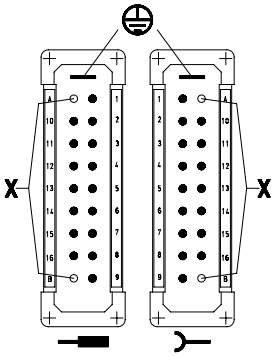

X = shortened switching contacts

Derating curve

according to IEC 60512 sec. 3

revos BASIC
Screw version
2.5 mm²

- 5-pole
- 8-pole
- 12-pole
- 18-pole

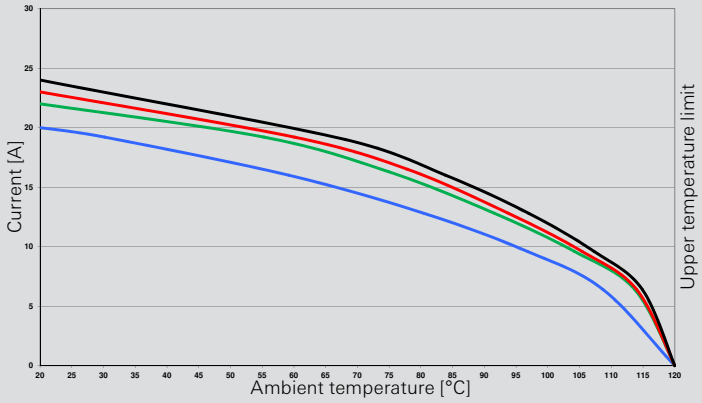

690 V contact inserts, screw connection

Contact inserts *revos* BASIC

6-pole + ground
Size 6

10-pole + ground
Size 10

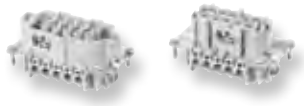

16-pole + ground
Size 16

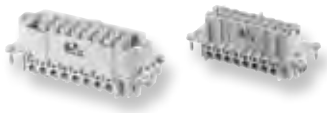

24-pole + ground
Size 24

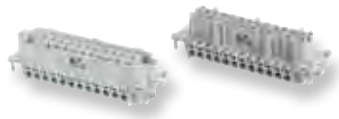

32-pole + ground
Size 32

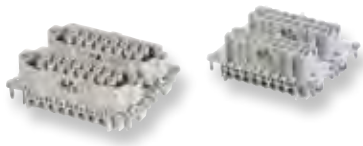

48-pole + ground
Size 48

Description	Type	Part No.	P.U.
Contact inserts *revos* BASIC 690 V	**6-pole + ground**		
Male insert	BAS STS 6 2,5 69	72.310.0653.0	10
Female insert	BAS BUS 6 2,5 69	72.300.0653.0	10
Contact inserts *revos* BASIC 690 V	**10-pole + ground**		
Male insert	BAS STS 10 2,5 69	72.310.1053.0	10
Female insert	BAS BUS 10 2,5 69	72.300.1053.0	10
Contact inserts *revos* BASIC 690 V	**16-pole + ground**		
Male insert	BAS STS 16 2,5 69	72.310.1653.0	10
Female insert	BAS BUS 16 2,5 69	72.300.1653.0	10
Contact inserts *revos* BASIC 690 V	**24-pole + ground**		
Male insert	BAS STS 24 2,5 69	72.310.2453.0	10
Female insert	BAS BUS 24 2,5 69	72.300.2453.0	10
Contact inserts *revos* BASIC 690 V	**32-pole + ground**		
Male insert, marked 1-16, 17-32	BAS STS 32 2,5 69	72.310.3253.0	5
Female insert, marked 1-16, 17-32	BAS BUS 32 2,5 69	72.300.3253.0	5
Contact inserts *revos* BASIC 690 V	**48-pole + ground**		
Male insert, marked 1-24, 25-48	BAS STS 48 2,5 69	72.310.4853.0	5
Female insert, marked 1-24, 25-48	BAS BUS 48 2,5 69	72.300.4853.0	5

Technical data	
Rated voltage	690 V
Rated voltage according to UL/CSA	600 V
Rated impulse voltage	8 kV
Rated current	16 A
Degree of pollution	3
Rated cross section	
EN 60999	0.5 – 2.5 mm^2
UL	20 – 12 AWG
CSA	20 – 12 AWG
Contacts	
Material	Copper alloy
Surface	Sn
Insulation strip length	7 mm
Contact resistance	≤ 1.5 mΩ
Mating cycles	200
Screws	head design / recomm. torque
Mounting screws	H1 / 0.5 – 0.7 Nm
Clamping screws	H1 / 0.5 – 0.7 Nm
Ground conductor screws	H2 / 1.2 – 1.6 Nm
Temperature range	-40 … +120 °C

Housing *revos* BASIC / *revos* BASIC M	Type	Page
Size	6/6H	118–125, 190–191, 194, 196
Size	10/10H	126–143, 190-192, 198, 200
Size	16/16H	144–163, 190-191, 202, 204
Size	24/24H	164–183, 190-191, 206, 208
Size	32	184–185
Size	48	186–189

Dimensions

6-pole + ground – 24-pole + ground

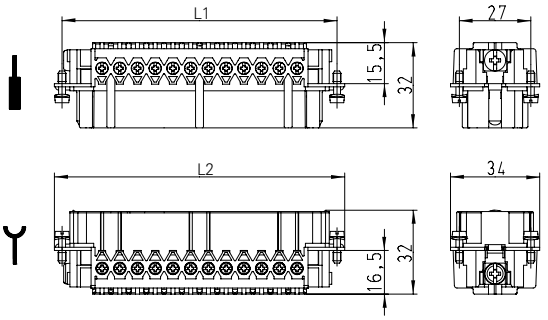

Number of poles	L1 [mm]	L2 [mm]
6	44.0	50.0
10	57.0	63.0
16	77.5	83
24	104.0	110.0
32	77.5	83
48	104.0	110.0

6-pole + ground

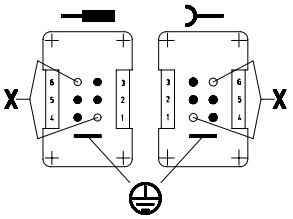

10-pole + ground

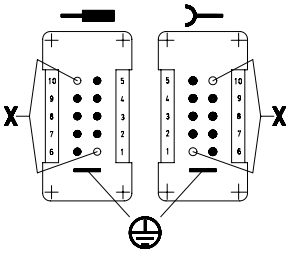

16-pole + ground

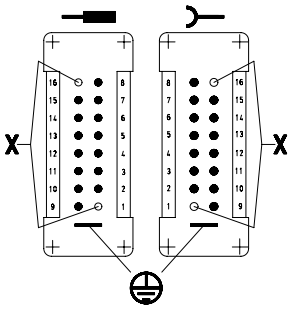

24-pole + ground

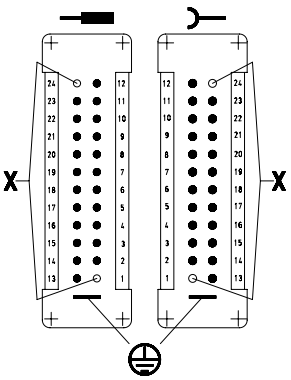

32-pole + ground

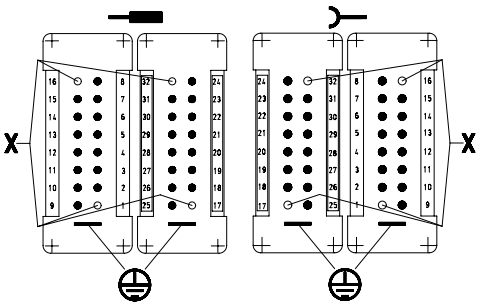

48-pole + ground

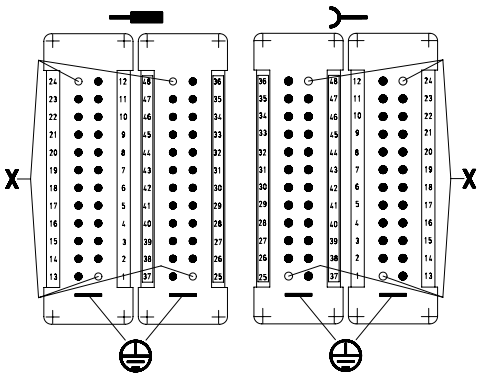

X = shortened switching contacts

Derating curve

according to IEC 60512 sec. 3

revos BASIC
Screw version
2.5 mm²

- 6-pole
- 10-pole
- 16-pole
- 24-pole

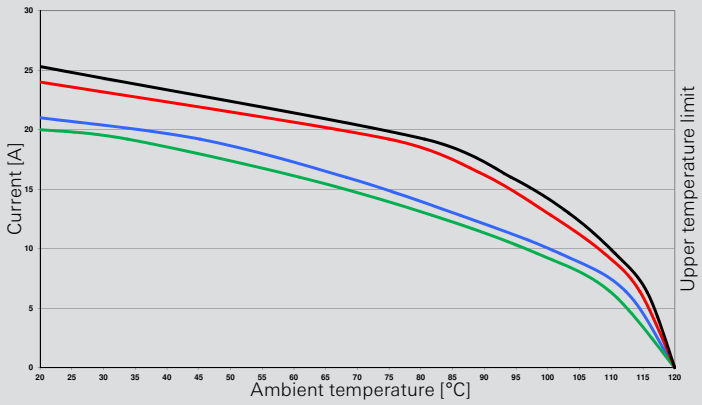

690 V contact inserts, crimp connection

Contact inserts *revos* BASIC

6-pole + ground
Size 6

10-pole + ground
Size 10

16-pole + ground
Size 16

24-pole + ground
Size 24

Description	Type	Part No.	P.U.
Contact inserts *revos* BASIC 690 V	**6-pole + ground**		
Male insert	BAS STC 6 69	72.710.0658.0	10
Female insert	BAS BUC 6 69	72.700.0658.0	10
Contact inserts *revos* BASIC 690 V	**10-pole + ground**		
Male insert	BAS STC 10 69	72.710.1058.0	10
Female insert	BAS BUC 10 69	72.700.1058.0	10
Contact inserts *revos* BASIC 690 V	**16-pole + ground**		
Male insert	BAS STC 16 69	72.710.1658.0	10
Female insert	BAS BUC 16 69	72.700.1658.0	10
Contact inserts *revos* BASIC 690 V	**24-pole + ground**		
Male insert	BAS STC 24 69	72.710.2458.0	10
Female insert	BAS BUC 24 69	72.700.2458.0	10
Contacts for crimp connection	mm^2 / AWG		
Male insert	0.5 / 20	05.543.70xx.0	200
Female insert	0.5 / 20	02.123.70xx.0	200
Male insert	0.75 – 1 / 18	05.543.71xx.0	200
Female insert	0.75 – 1 / 18	02.123.71xx.0	200
Male insert	1.5 / 16	05.543.72xx.0	200
Female insert	1.5 / 16	02.123.72xx.0	200
Male insert	2.5 / 14	05.543.73xx.0	200
Female insert	2.5 / 14	02.123.73xx.0	200
Male insert	4 / 12	05.543.74xx.0	200
Female insert	4 / 12	02.123.74xx.0	200
Surface	tin-plated xx = 21 / silver-plated xx = 02 / gold-plated xx = 01		
Connector switching contacts (2 contacts required)	0.5 / 20	05.543.9021.0	200
Connector switching contacts (2 contacts required)	0.75 – 1 / 18	05.543.9121.0	200
Connector switching contacts (2 contacts required)	1.5 / 16	05.543.9221.0	200
Connector switching contacts (2 contacts required)	2.5 / 14	05.543.9321.0	200
Connector switching contacts (2 contacts required)	4 / 12	05.543.9421.0	200

Technical data	
Rated voltage	690 V
Rated voltage according to UL/CSA	600 V
Rated impulse voltage	8 kV
Rated current	16 A
Degree of pollution	3
Rated cross section	
EN 60999	0.5 – 4 mm^2
UL	20 – 12 AWG
CSA	20 – 12 AWG
Contacts	
Material	Copper alloy
Surface	Sn, Ag, Au
Insulation strip length	7 mm
Contact resistance	≤ 1.5 mΩ
Mating cycles	Sn 200 / Ag, Au 500
Screws	head design / recomm. torque
Mounting screws	H1 / 0.5 – 0.7 Nm
Clamping screws	-
Ground conductor screws	H2 / 1.2 – 1.6 Nm
Temperature range	-40 … +120 °C

Description	Type	Part No.	P.U.
Accessories			
Crimping tool		95.101.0800.0	1
Crimping die	"B"	05.502.2100.0	1
Contact positioner	"3"	05.502.3300.0	1
Extraction tool		05.502.3500.0	1

Housing *revos* BASIC / *revos* BASIC M	Type	Page
Size	6/6H	118–125, 190–191, 194, 196
Size	10/10H	126–143, 190-192, 198, 200
Size	16/16H	144–163, 190-191, 202, 204
Size	24/24H	164–183, 190-191, 206, 208

Dimensions

6-pole + ground – 24-pole + ground

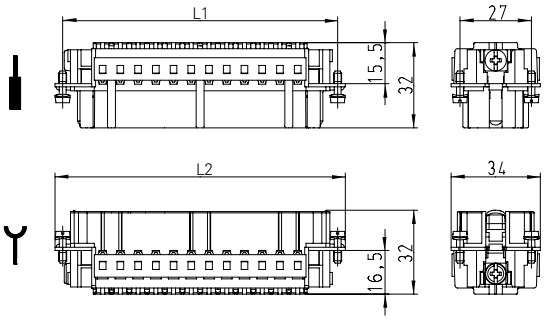

Number of poles	L1 [mm]	L2 [mm]
6	44.0	50.0
10	57.0	63.0
16	77.0	83
24	104.0	110.0

6-pole + ground

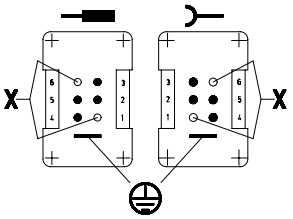

10-pole + ground

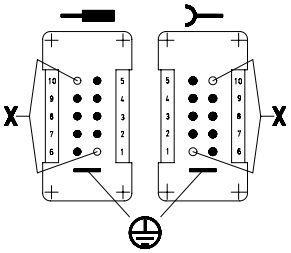

16-pole + ground

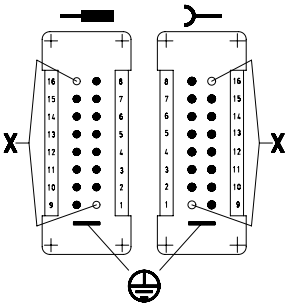

24-pole + ground

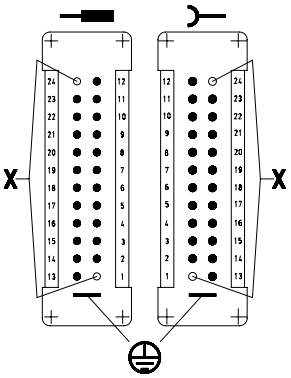

X = shortened switching contacts

Derating curve

according to IEC 60512 sec. 3

revos BASIC
Crimp version
2.5 mm²

- 6-pole
- 10-pole
- 16-pole
- 24-pole

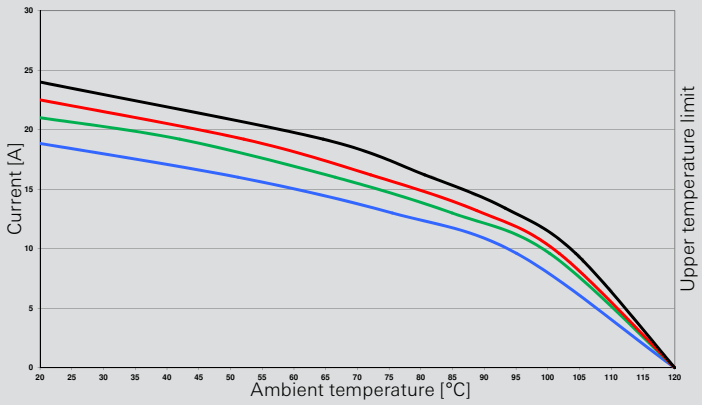

830 V contact inserts, spring clamp connection

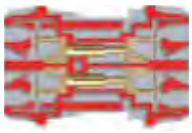

Contact inserts ***revos*** BASIC

3-pole + 2 switching contacts + ground, Size 10

6-pole + 2 switching contacts + ground, Size 16

10-pole + 2 switching contacts + ground, Size 24

Description	Type	Part No.	P.U.
Contact inserts *revos* BASIC 830 V	**3-pole + ground**		
Male insert	BAS STF 3 2,5 83 AG	70.516.0353.0	10
Female insert	BAS BUF 3 2,5 83 AG	70.506.0353.0	10
Contact inserts *revos* BASIC 830 V	**6-pole + ground**		
Male insert	BAS STF 6 2,5 83 AG	70.516.0653.0	10
Female insert	BAS BUF 6 2,5 83 AG	70.506.0653.0	10
Contact inserts *revos* BASIC 830 V	**10-pole + ground**		
Male insert	BAS STF 10 2,5 83 AG	70.516.1053.0	10
Female insert	BAS BUF 10 2,5 83 AG	70.506.1053.0	10

Technical data	
Rated voltage	830 V
Rated voltage according to UL/CSA	600 V
Rated impulse voltage	8 kV
Rated current	16 A
Degree of pollution	3
Rated cross section	
EN 60999	0.14 – 2.5 mm²
UL	26 – 12 AWG
CSA	26 – 12 AWG
Contacts	
Material	Copper alloy
Surface	Ag
Insulation strip length	7 mm
Contact resistance	≤ 3 mΩ
Mating cycles	500
Screws	head design / recomm. torque
Mounting screws	H1 / 0.5 – 0.7 Nm
Clamping screws	-
Ground conductor screws	H2 / 1.2 – 1.6 Nm
Temperature range	-40 … +120 °C

Description	Type	Part No.	P.U.
Accessories			
Screwdriver blade	DIN 5264 A 0,6 x 3,5	06.502.4000.0	5

Housing *revos* BASIC / *revos* BASIC M	Type	Page
Size	10/10H	126–143, 190-192, 198, 200
Size	16/16H	144–163, 190-191, 202, 204
Size	24/24H	164–183, 190-191, 206, 208

Dimensions

3-pole + 2 switching contacts + ground – 10-pole + 2 switching contacts + ground

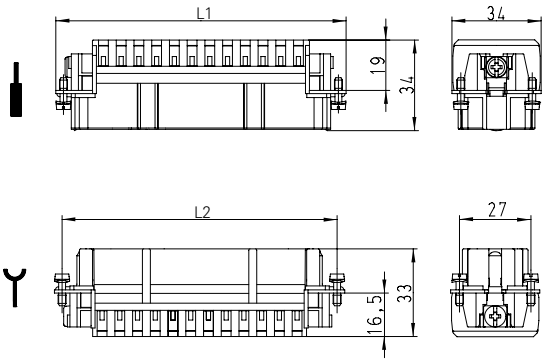

Number of poles	L1 [mm]	L2 [mm]
3	63.0	57.0
6	83.0	77.5
10	110.0	104.0

3-pole + 2 switching contacts + ground

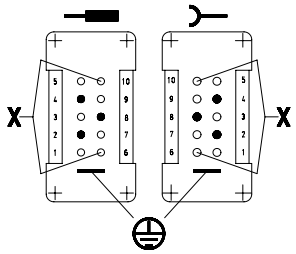

6-pole + 2 switching contacts + ground

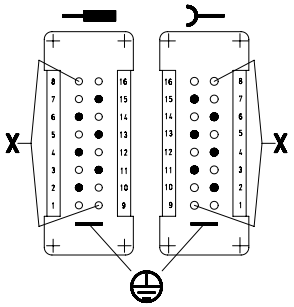

10-pole + 2 switching contacts + ground

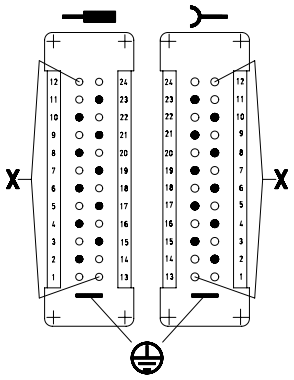

X = shortened switching contacts

Derating curve

according to IEC 60512 sec. 3

revos BASIC
Spring version
830 V / 16 A / 2.5 mm²

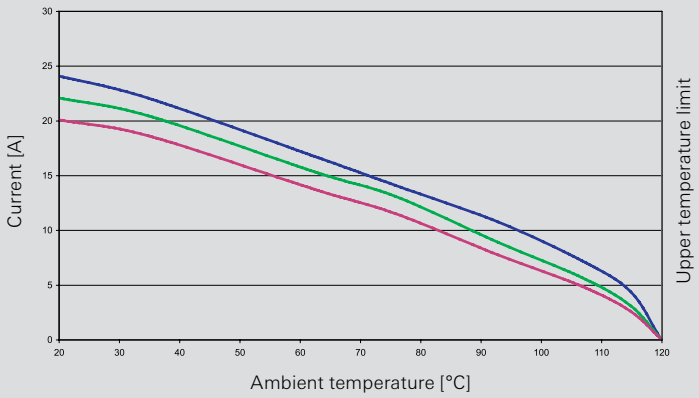

250 V contact inserts, with crimp connection

Contact inserts ***revos*** DD

24-pole + ground
Size 6/6H

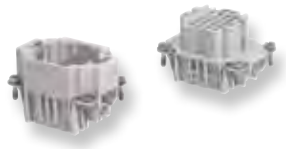

42-pole + ground
Size 10/10H

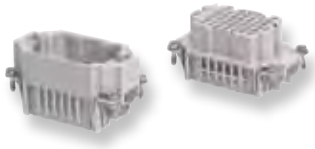

72-pole + ground
Size 16/16H

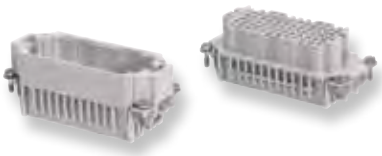

108-pole + ground
Size 24/24H

Description	Type	Part No.	P.U.
Contact inserts *revos*DD 250 V	**24-pole + ground**		
Male insert	DD STC 24 1,5 25	73.810.2453.0	10
Female insert	DD BUC 24 1,5 25	73.800.2453.0	10
Contact inserts *revos*DD 250 V	**42-pole + ground**		
Male insert	DD STC 42 1,5 25	73.810.4253.0	10
Female insert	DD BUC 42 1,5 25	73.800.4253.0	10
Contact inserts *revos*DD 250 V	**72-pole + ground**		
Male insert	DD STC 72 1,5 25	73.810.7253.0	10
Female insert	DD BUC 72 1,5 25	73.800.7253.0	10
Contact inserts *revos*DD 250 V	**108-pole + ground**		
Male insert	DD STC 108 1,5 25	73.810.0853.0	10
Female insert	DD BUC 108 1,5 25	73.800.0853.0	10
Contacts for crimp connection	mm^2 / AWG		
Male insert	0.14 – 0.37 / 20	05.544.4129.x	200
Female insert	0.14 – 0.37 / 20	02.125.4129.x	200
Male insert	0.5 / 20	05.544.4229.x	200
Female insert	0.5 / 20	02.125.4229.x	200
Male insert	0.75 – 1 / 18	05.544.4329.x	200
Female insert	0.75 – 1 / 18	02.125.4329.x	200
Male insert	1.5 / 16	05.544.4429.x	200
Female insert	1.5 / 16	02.125.4429.x	200
Male insert	2.5 / 14	05.544.4529.x	200
Female insert	2.5 / 14	02.125.4529.x	200
	silver-plated x = 8 / gold-plated x = 7		

Technical data	
Rated voltage	250 V
Rated voltage according to UL/CSA	600 V AC (CSA)
Rated impulse voltage	2.5 kV
Rated current	10 A
Degree of pollution	2 (3 in Housing with IP54 and higher)
Rated cross section	
EN 60999	0.14 – 2.5 mm^2
UL	26 – 14 AWG
CSA	26 – 14 AWG
Contacts	
Material	Copper alloy
Surface	Ag, Au
Insulation strip length	8 mm
Contact resistance	< 5 mΩ
Mating cycles	Ag, Au 500
Screws	head design / recomm. torque
Mounting screws	Z1 / 0.5 – 0.7 Nm
Clamping screws	-
Ground conductor screws	Z2 / 1.2 Nm
Temperature range	-40 … +120 °C

Description	Type	Part No.	P.U.
Accessories			
Crimping tool		95.101.0800.0	1
Crimping die	"B"	05.502.2100.0	1
Contact positioner	"1"	05.502.3100.0	1
Extraction tool		05.502.0710.0	1

Housing *revos* BASIC / ***revos*** BASIC M	Type	Page
Size	6/6H	118–125, 190–191, 194, 196
Size	10/10H	126–143, 190-192, 198, 200
Size	16/16H	144–163, 190-191, 202, 204
Size	24/24H	164–183, 190-191, 206, 208

Dimensions

24-pole + ground – 108-pole + ground

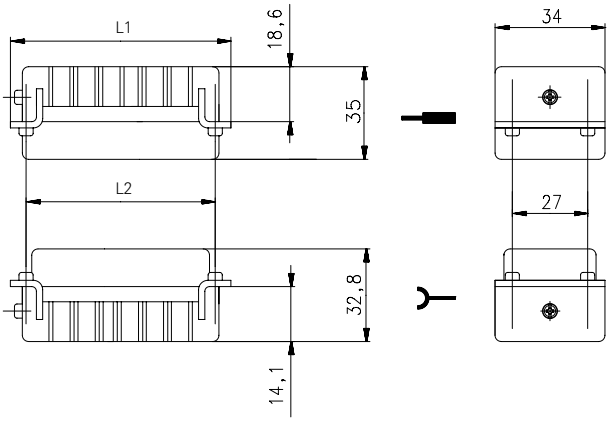

Number of poles	L1 [mm]	L2 [mm]
24	50.5	44.0
42	63.5	57.0
72	84	77.5
108	110.5	104.0

24-pole + ground

Connection side

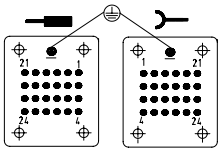

Cut-out

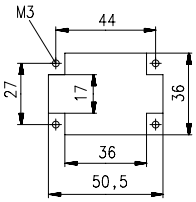

42-pole + ground

Connection side

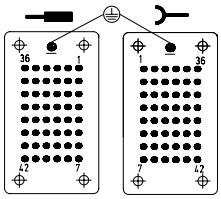

Cut-out

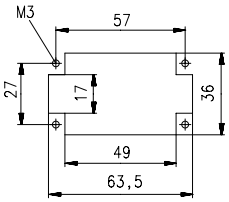

72-pole + ground

Connection side

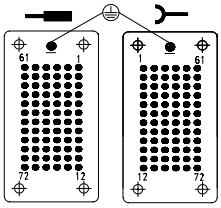

Cut-out

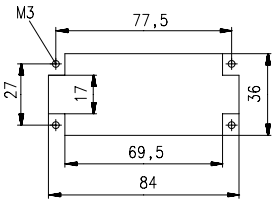

108-pole + ground

Connection side

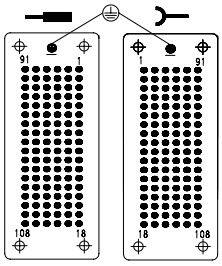

Cut-out

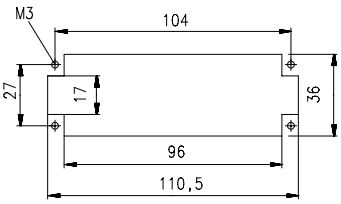

Derating curve according to IEC 60512 sec. 3

revos DD 250V / 10 A / 1.5 mm²

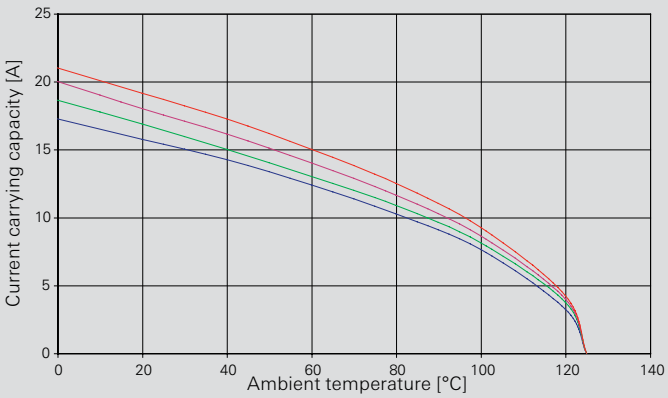

Derating curve according to IEC 60512 sec. 3

revos DD 250V / 16 A / 2.5 mm²

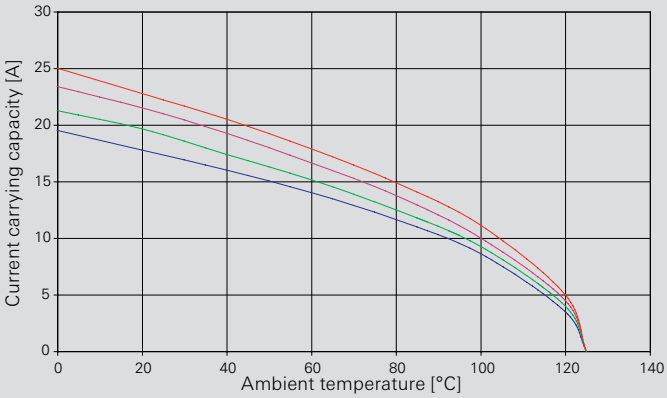

24-pole 42-pole 72-pole 108-pole

250 V contact inserts, screw connection

Contact inserts *revos* HD

c UL us

10-pole + ground
Size 10/15

16-pole + ground
Size 16/25, 32/50

32-pole + ground
Size 32/50

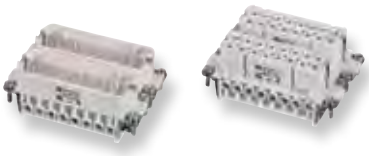

Description	Type	Part No.	P.U.
Contact inserts *revos* HD 250 V	**10-pole + ground**		
Male insert	HD STS 10 2,5 25 AG	73.310.1053.0	10
Female insert	HD BUS 10 2,5 25 AG	73.300.1053.0	10
Contact inserts *revos* HD 250 V	**16-pole + ground**		
Male insert	HD STS 16 2,5 25 AG	73.310.1653.0	10
Female insert	HD BUS 16 2,5 25 AG	73.300.1653.0	10
Male insert, marked 17-32	HD STS SB 16 2,5 25 AG	73.310.1653.3	10
Female insert, marked 17-32	HD BUS SB 16 2,5 25 AG	73.300.1653.3	10
Contact inserts *revos* HD 250 V	**32-pole + ground**		
Male insert, marked 1-16, marked 17-32	HD STS 32 2,5 25 AG	73.310.3253.0	5
Female insert, marked 1-16, marked 17-32	HD BUS 32 2,5 25 AG	73.300.3253.0	5

Technical data	
Rated voltage	250 V
Rated voltage according to UL/CSA	600 V
Rated impulse voltage	4 kV
Rated current	VDE 16 A / CSA 16 A / UL 14 A
Degree of pollution	3
Rated cross section	
EN 60999	e* 0.5 – 1.5 mm^2/f** 0.75 – 2.5 mm^2
UL	20 – 14 AWG
CSA	20 – 14 AWG
Contacts	
Material	Copper alloy
Surface	Ag
Insulation strip length	7 mm
Contact resistance	≤ 4 mΩ
Mating cycles	100
Screws	head design / recomm. torque
Mounting screws	Z1 / 0.5 Nm
Clamping screws	Z1 / 0.5 Nm
Ground conductor screws	Z2 / 1.2 Nm
Temperature range	-40 … +120 °C

Housing *revos* HD	Type	Page
Size	10/15	210–213
Size	16/25	214–217
Size	32/50	218–223

* Solid
** Fine stranded

Dimensions

10-pole + ground – 32-pole + ground

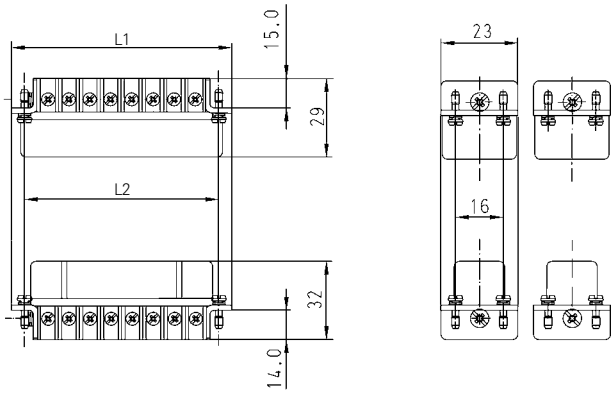

Number of poles	L1 [mm]	L2 [mm]
10	56.5	49.5
16	73.0	66.0
32	73.0	66.0

10-pole + ground

Connection side

Male Female

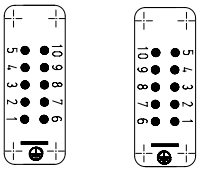

Cut-out

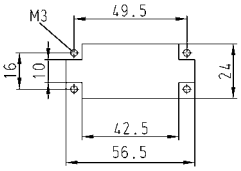

16-pole + ground

Connection side

Male Female

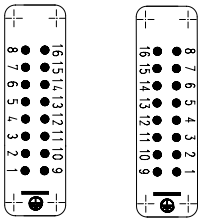

Cut-out

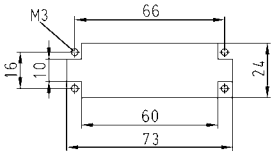

32-pole + ground

Connection side

Male Female

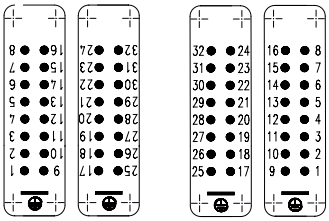

Cut-out

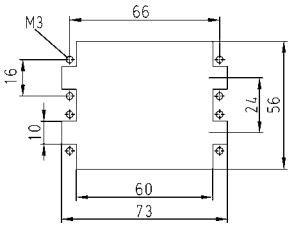

Derating curve according to IEC 60512 sec. 3

revos HD 10/16 250 V / 16 A / 1.5 mm²

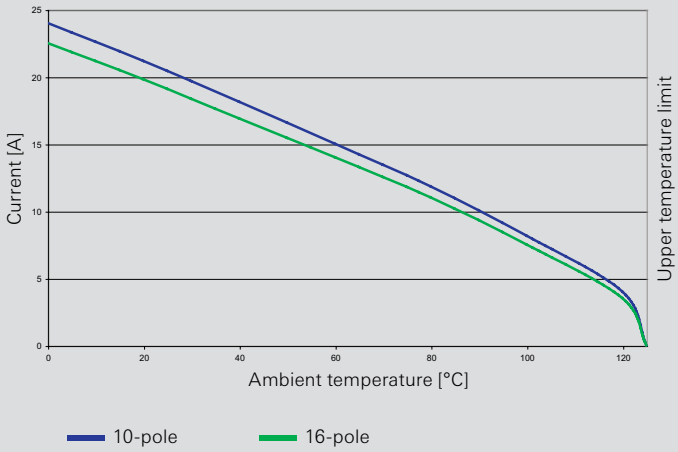

Derating curve according to IEC 60512 sec. 3

revos HD 10/16 250 V / 16 A / 2.5 mm²

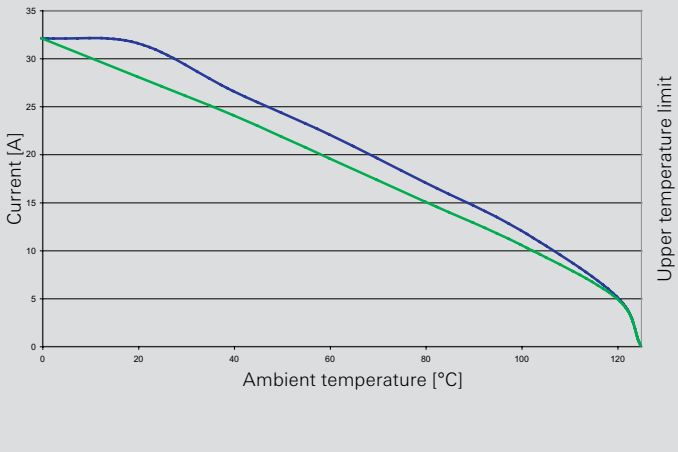

250 V contact inserts, with crimp connection

Contact inserts ***revos*** HD

15-pole + ground
Size 10/15

25-pole + ground
Size 16/25, 32/50

Description	Type	Part No.	P.U.
Contact inserts *revos*HD 250 V	**15-pole + ground**		
Male insert	HD STC 15 25	73.710.1553.0	10
Female insert	HD BUC 15 25	73.700.1553.0	10
Contact inserts *revos*HD 250 V	**25-pole + ground**		
Male insert	HD STC 25 25	73.710.2553.0	10
Female insert	HD BUC 25 25	73.700.2553.0	10
Contacts for crimp connection	mm² / AWG		
Male reel contacts, Sn	0.2 – 0.56 / 24 – 20	05.544.0900.0	5000
Female reel contacts, Sn	0.2 – 0.56 / 24 – 20	02.124.0900.0	5000
Male reel contacts, Sn	0.75 – 1.5 / 18 – 16	05.544.1000.0	5000
Female reel contacts, Sn	0.75 – 1.5 / 18 – 16	02.124.1000.0	5000
Male single contacts, Sn	0.2 – 0.56 / 24 – 20	05.544.0929.0	200
Female single contacts, Sn	0.2 – 0.56 / 24 – 20	02.124.0929.0	200
Male single contacts, Sn	0.75 – 1.5 / 18 – 16	05.544.1029.0	200
Female single contacts, Sn	0.75 – 1.5 / 18 – 16	02.124.1029.0	200
Male reel contacts, Au	0.5 – 1.5 / 20 – 16	05.544.1400.0	5000
Female reel contacts, Au	0.5 – 1.5 / 20 – 16	02.124.1400.0	5000
Male single contacts, Au	0.5 – 1.5 / 20 – 16	05.544.1429.0	200
Female single contacts, Au	0.5 – 1.5 / 20 – 16	02.124.1429.0	200

Technical data	
Rated voltage	250 V
Rated voltage according to UL/CSA	600 V
Rated impulse voltage	4 kV
Rated current	10 A
Degree of pollution	3
Rated cross section	
EN 60999	0.2 – 1.5 mm²
UL	24 – 16 AWG
CSA	24 – 16 AWG
Contacts	
Material	Copper alloy
Surface	Au, Sn
Insulation strip length	4 mm
Contact resistance	≤ 4 mΩ
Mating cycles	Au 500 / Sn 50
Screws	head design / recomm. torque
Mounting screws	H1 / 0.5 – 0.7 Nm
Clamping screws	-
Ground conductor screws	M3.5 / 0.8 – 1.0 Nm
Temperature range	-40 … +120 °C

Description	Type	Part No.	P.U.
Accessories			
Crimping tool		95.101.0800.0	1
Crimping die	"E"	05.502.2400.0	1
Contact positioner	"2"	05.502.3200.0	1
Extraction tool		05.502.0000.0	1

Housing *revos* HD	Type	Page
Size	10/15	210–213
Size	16/25	214–217
Size	32/50	218–223

Dimensions

15-pole + ground

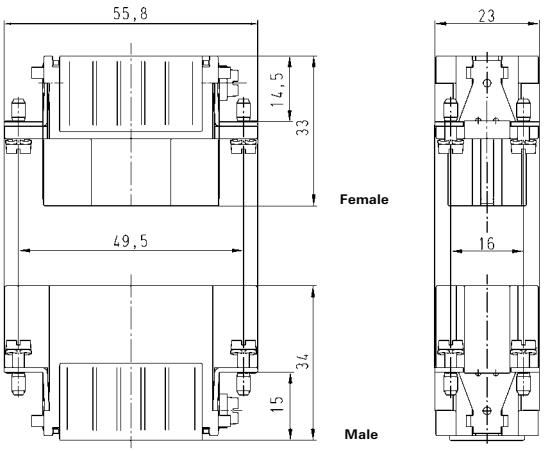

Connection side

Male **Female**

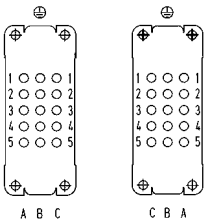

Cut-out

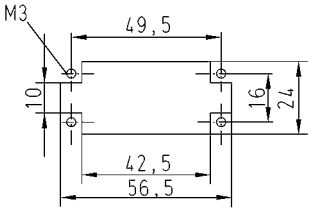

25-pole + ground

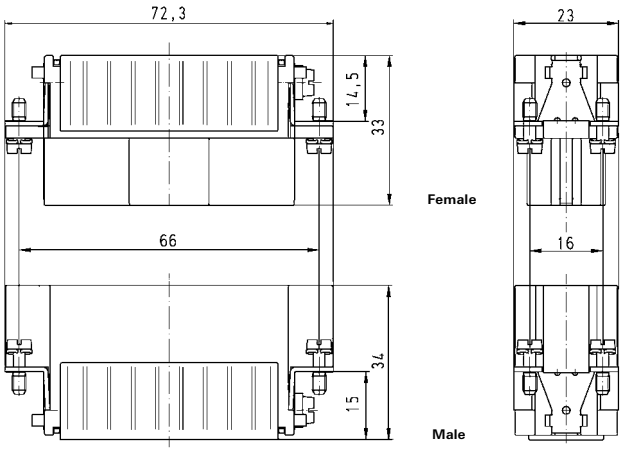

Connection side

Male **Female**

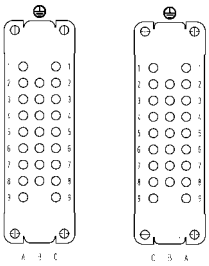

Cut-out

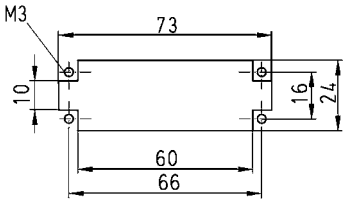

Derating curve according to IEC 60512 sec. 3

73.700/710.1553.0 ***revos*** HD 15-pole 250 V / 10 A / 1.5 mm²

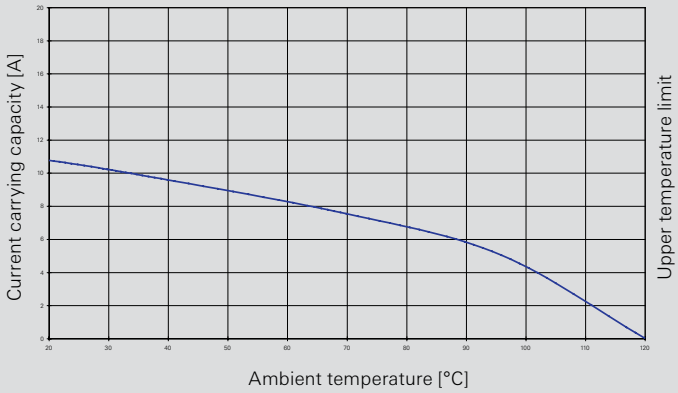

Derating curve according to IEC 60512 sec. 3

73.700/710.2553.0 ***revos*** HD 25-pole 250 V / 10 A / 1.5 mm²

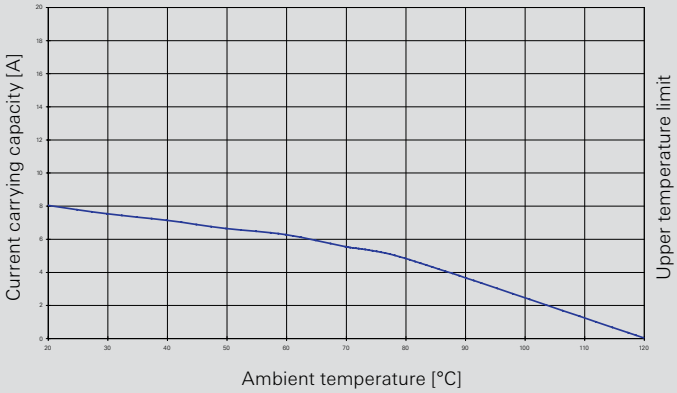

250 V contact inserts, with crimp connection

Contact inserts *revos*HD

40-pole + ground
Size 16

64-pole + ground
Size 24

Description	Type	Part No.	P.U.
Contact inserts *revos*HD 250 V	**40-pole + ground**		
Male insert	HD STC 40 25	73.710.4058.0	10
Female insert	HD BUC 40 25	73.700.4058.0	10
Contact inserts *revos*HD 250 V	**64-pole + ground**		
Male insert	HD STC 64 25	73.710.6458.0	10
Female insert	HD BUC 64 25	73.700.6458.0	10
Contacts for crimp connection	mm^2 / AWG		
Male contact Sn, reel	0.2 – 0.56 / 24 – 20	05.544.0900.0	5000
Female contact Sn, reel	0.2 – 0.56 / 24 – 20	02.124.0900.0	5000
Male contact Sn, reel	0.75 – 1.5 / 18 – 16	05.544.1000.0	5000
Female contact Sn, reel	0.75 – 1.5 / 18 – 16	02.124.1000.0	5000
Male contact Sn, single	0.2 – 0.56 / 24 – 20	05.544.0929.0	200
Female contact Sn, single	0.2 – 0.56 / 24 – 20	02.124.0929.0	200
Male contact Sn, single	0.75 – 1.5 / 18 – 16	05.544.1029.0	200
Female contact Sn, single	0.75 – 1.5 / 18 – 16	02.124.1029.0	200
Male contact Au, reel	0.5 – 1.5 / 20 – 16	05.544.1400.0	5000
Female contact Au, reel	0.5 – 1.5 / 20 – 16	02.124.1400.0	5000
Male contact Au, single	0.5 – 1.5 / 20 – 16	05.544.1429.0	200
Female contact Au, single	0.5 – 1.5 / 20 – 16	02.124.1429.0	200

Technical data	
Rated voltage	250 V
Rated voltage according to UL/CSA	600 V
Rated impulse voltage	4 kV
Rated current	10 A
Degree of pollution	3
Rated cross section	
EN 60999	0.2 – 1.5 mm^2
UL	24 – 16 AWG
CSA	24 – 16 AWG
Contacts	
Material	Copper alloy
Surface	Au, Sn
Insulation strip length	4 mm
Contact resistance	≤ 4 mΩ
Mating cycles	Au 500 / Sn 50
Screws	head design / recomm. torque
Mounting screws	H1 / 0.5 – 0.7 Nm
Clamping screws	-
Ground conductor screws	M3.5 / 0.8 – 1.0 Nm
Temperature range	-40 … +120 °C

Description	Type	Part No.	P.U.
Accessories			
Crimping tool		95.101.0800.0	1
Crimping die	"E"	05.502.2400.0	1
Contact positioner	"2"	05.502.3200.0	1
Extraction tool		05.502.0000.0	1

Housing *revos* HD	Type	Page
Size	16H	146, 150, 156, 158, 162, 190, 191
Size	24H	166, 170, 176, 178, 182, 190, 191
Size	32	184–185

Derating curve see page 69.

Dimensions

40-pole + ground – 80-pole + ground

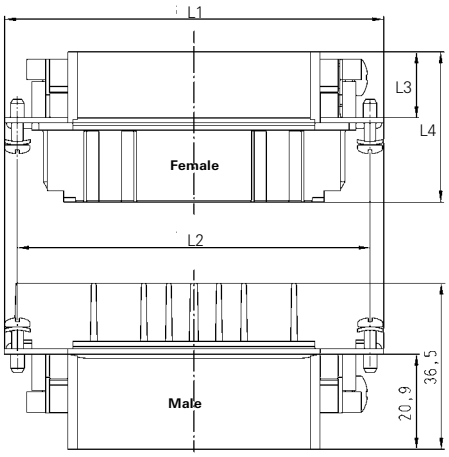

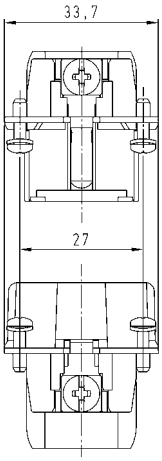

Number of poles	L1 [mm]	L2 [mm]	L3 [mm]	L4 [mm]
40	83.3	77.5	14.5	33.0
64	109.8	104.0	14.4	33.5

40-pole + ground

Connection side

Male Female

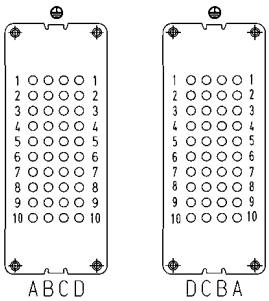

Cut-out

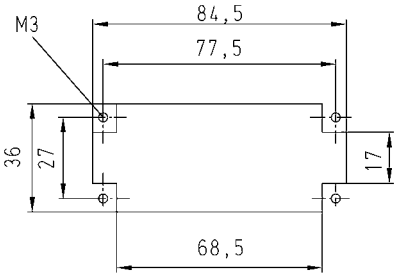

64-pole + ground

Connection side

Male Female

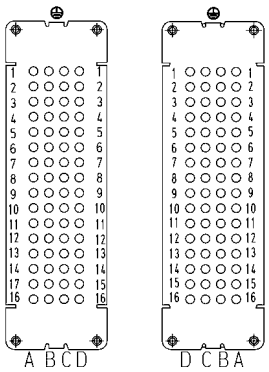

Cut-out

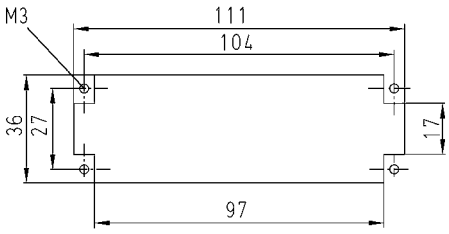

250 V multipole adapter, screw connection

Multipole adapter *revos*HD

40-pole + ground
Size 16

64-pole + ground
Size 24

Description	Type	Part No.	P.U.
Multipole adapter *revos*HD 250 V	**40-pole + ground**		
Male insert, ground right	HD SAS WR 40 2,5 25	73.115.4053.0	4
Female insert, ground right	HD BAS WR 40 2,5 25	73.105.4053.0	4
Male insert, ground left	HD SAS WL 40 2,5 25	73.110.4053.0	4
Female insert, ground left	HD BAS WL 40 2,5 25	73.100.4053.0	4
Multipole adapter *revos*HD 250 V	**64-pole + ground**		
Male insert, ground right	HD SAS WR 64 2,5 25	73.115.6453.0	2
Female insert, ground right	HD BAS WR 64 2,5 25	73.105.6453.0	2
Male insert, ground left	HD SAS WL 64 2,5 25	73.110.6453.0	2
Female insert, ground left	HD BAS WL 64 2,5 25	73.100.6453.0	2

Technical data	
Rated voltage	250 V
Rated voltage according to UL/CSA	600 V
Rated impulse voltage	4 kV
Rated current	10 A
Degree of pollution	3
Rated cross section	
EN 60999	0.5 – 2.5 mm^2
UL	20 – 14 AWG
CSA	20 – 14 AWG
Contacts	
Material	Copper alloy
Surface	Sn
Insulation strip length	12 mm
Contact resistance	≤ 6 mΩ
Mating cycles	50
Screws	head design / recomm. torque
Mounting screws	H1 / 0.5 – 0.7 Nm
Clamping screws	M2.5 / 0.4 – 0.6 Nm
Ground conductor screws	H1 / 1.2 – 1.6 Nm
Temperature range	-40 … +120 °C

Housing

These multipole adapters may only be used with the following bases:

Description	Type	Part No.	P.U.
Open-bottom base, Size 16			
without cover, double locking lever	BAS GUT GX 16H 50 A	73.326.4028.0	1
with cover, double locking lever	BAS GUT GY 16H 50 A	73.327.4028.0	1
without cover, single locking lever	BAS GUT GV 16H 50 A	76.326.4028.0	1
with cover, single locking lever	BAS GUT GW 16H 50 A	76.327.4028.0	1
Open-bottom base, Size 24			
without cover, double locking lever	BAS GUT GX 24H 50 A	73.326.6428.0	1
with cover, double locking lever	BAS GUT GY 24H 50 A	73.327.6428.0	1
without cover, single locking lever	BAS GUT GV 24H 50 A	76.326.6428.0	1
with cover, single locking lever	BAS GUT GW 24H 50 A	76.327.6428.0	1

Dimensions

40-pole + ground

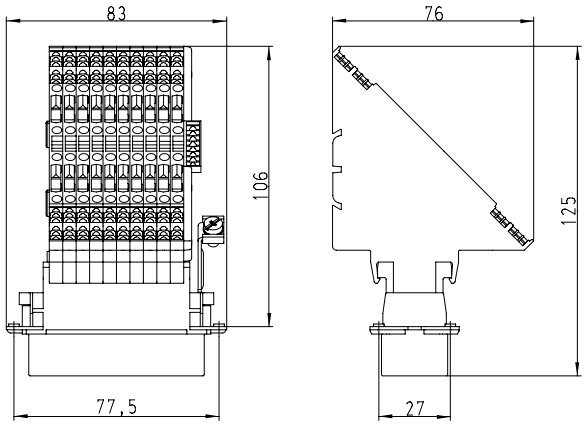

Connection side

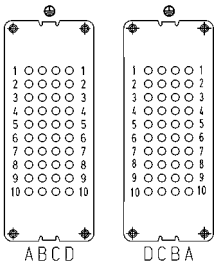

Cut-out

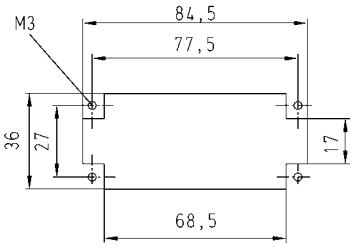

64-pole + ground

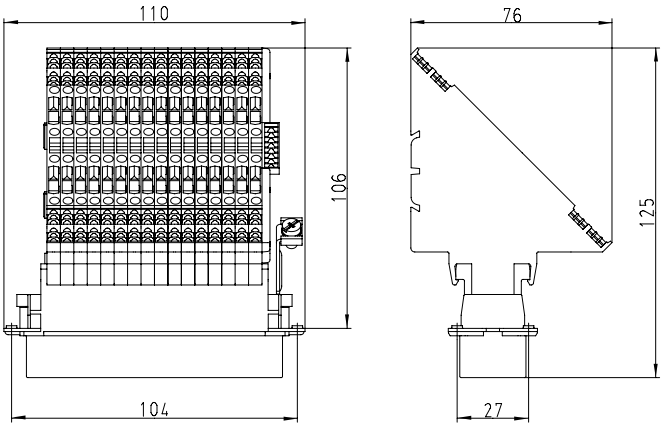

Connection side

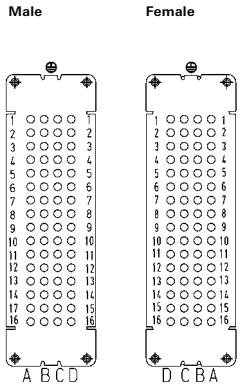

Cut-out

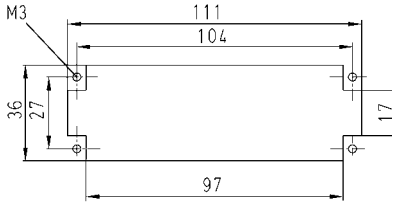

Derating curve according to IEC 60512 sec. 3

revos HD 40-pole / 1.5 mm²

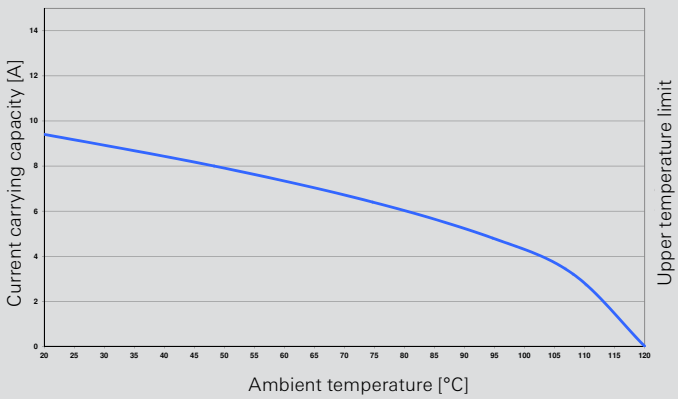

Derating curve according to IEC 60512-5-2

73.700/710.6458.0 ***revos*** HD 64-pole

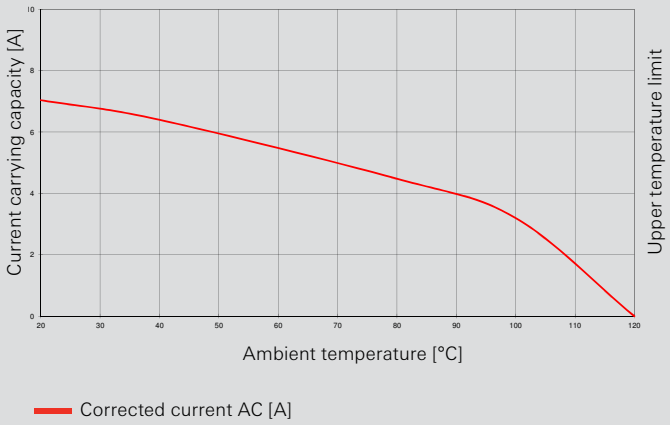

400 V 35 A contact inserts, screw connection

Contact inserts ***revos*** POWER

6-pole + ground
400 V
Size 16

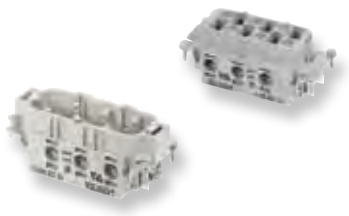

Description	Type	Part No.	P.U.
Contact inserts *revos* POWER	**6-pole + ground**		
Male insert	POW STS 6 6,0 40 AG	70.210.0653.0	10
Female insert	POW BUS 6 6,0 40 AG	70.200.0653.0	10

Technical data	
Rated voltage	400 V
Rated voltage according to UL/CSA	600 V
Rated impulse voltage	6 kV
Rated current	35 A
Degree of pollution	3
Rated cross section	
EN 60999	2.5 – 6 mm²
UL	14 – 8 AWG
CSA	14 – 8 AWG
Contacts	
Material	Copper alloy
Surface	Ag
Insulation strip length	10 mm
Contact resistance	≤ 0.6 mΩ
Mating cycles	200
Screws	head design / recomm. torque
Mounting screws	H1 / 0.5 – 0.7 Nm
Clamping screws	H1 / 1.2 – 1.6 Nm
Ground conductor screws	M5 / 2.0 – 2.5 Nm
Temperature range	-40 … +120 °C

Housing *revos* BASIC	Type	Page
Size	16/16H	144–163
Size	16XL	159

Dimensions

6-pole + ground 400 V

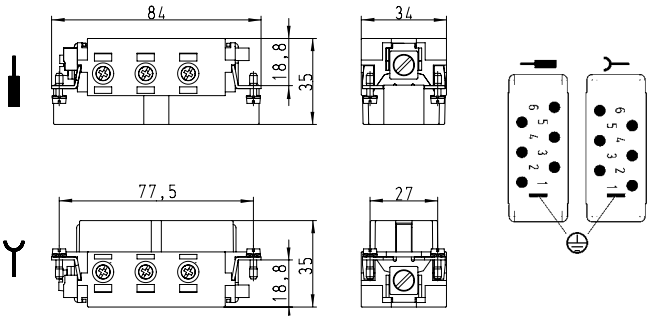

Derating curve

according to IEC 60512 sec. 3
revos POWER
70.200/210.0653.0 ***revos*** POWER
6-pole 400 V / 35 A / 6.0 mm²

Corrected current AC [A]

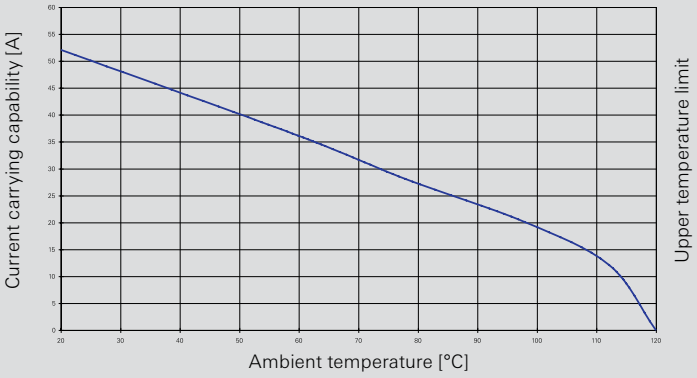

690 V 35 A contact inserts, screw connection

Contact inserts *revos* POWER

6-pole + ground
690 V
Size 16

Description	Type	Part No.	P.U.
Contact inserts *revos* POWER	**6-pole + ground**		
Male insert	POW STS 6 6,0 69 AG	72.210.0653.0	10
Female insert	POW BUS 6 6,0 69 AG	72.200.0653.0	10

Technical data	
Rated voltage	690 V
Rated voltage according to UL/CSA	600 V
Rated impulse voltage	8 kv
Rated current	35 A
Degree of pollution	3
Rated cross section	
EN 60999	2.5 – 6 mm²
UL	14 – 8 AWG
CSA	14 – 8 AWG
Contacts	
Material	Copper alloy
Surface	Ag
Insulation strip length	10 mm
Contact resistance	≤ 0.6 mΩ
Mating cycles	200
Screws	head design / recomm. torque
Mounting screws	H1 / 0.5 – 0.7 Nm
Clamping screws	H1 / 1.2 – 1.6 Nm
Ground conductor screws	M5 / 2.0 – 2.5 Nm
Temperature range	-40 … +120 °C

Housing *revos* BASIC	Type	Page
Size	16/16H	144–147
Size	16XL	159

Dimensions

6-pole + ground 690 V

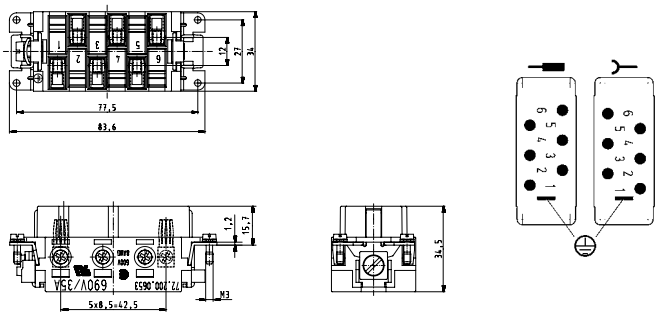

Derating curve

according to IEC 60512 sec. 3

revos POWER
72.200/210.0653.0 ***revos*** POWER
6-pole 690 V / 35 A / 6.0 mm²

Corrected current AC [A]

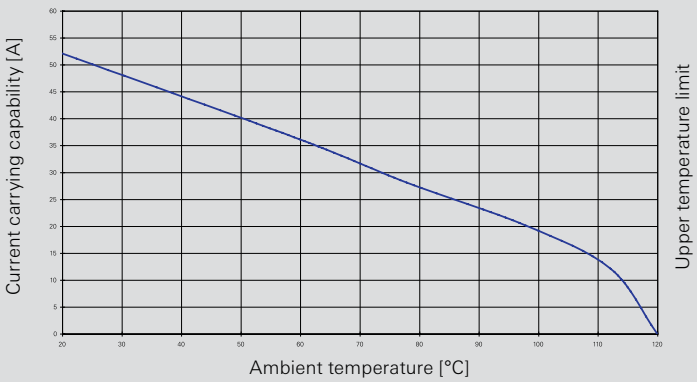

400/690 V 82 A
Contact inserts, screw connection

Contact inserts ***revos*** POWER

4-pole + ground
400/690 V
Size 16H

Description	Type	Part No.	P.U.
Contact inserts *revos* POWER	**4-pole + ground**		
Male insert	POW STS 4 16 64 AG	72.218.0453.0	10
Female insert	POW BUS 4 16 64 AG	72.208.0453.0	10

Technical data	
Rated voltage	L-PE 400 V / L-L 690 V
Rated voltage according to UL/CSA	600 V
Rated impulse voltage	6 kV
Rated current	82 A
Degree of pollution	3
Rated cross section	
EN 60999	6 – 16 mm²
UL	10 – 4 AWG
CSA	10 – 4 AWG
Contacts	
Material	Copper alloy
Surface	Ag
Insulation strip length	10 mm
Contact resistance	≤ 0.6 mΩ
Mating cycles	200
Screws	head design / recomm. torque
Mounting screws	H1 / 0.5 – 0.7 Nm
Clamping screws	H2 / 2.5 – 3.0 Nm
Ground conductor screws	M5 / 2.0 – 2.5 Nm
Temperature range	-40 … +120 °C

Housing *revos* BASIC	Type	Page
Size	16H	146, 150, 156, 158, 162
Size	16XL	159

Dimensions

4-pole + ground 400/690 V

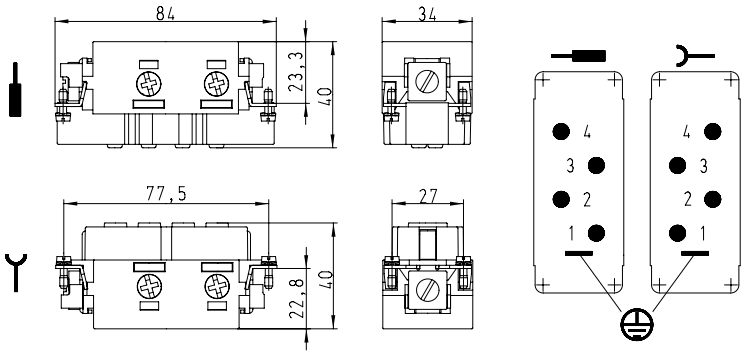

Derating curve
according to IEC 60512 sec. 3
72.208/218.0453.0 ***revos*** POWER
4-pole 690 V / 400 V / 82 A / 16.0 mm²

Corrected current AC [A]

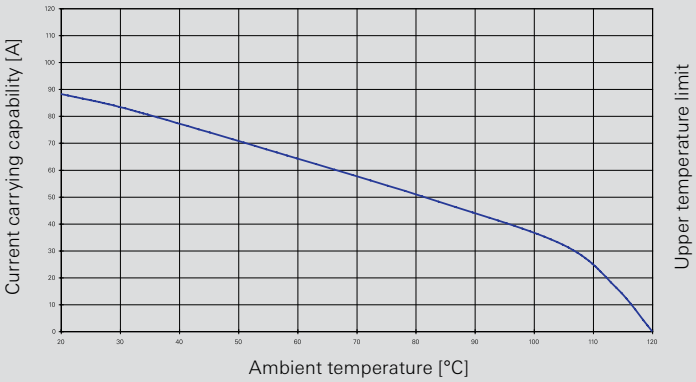

690 V 4 x 35 A, 6 x 16 A
Contact inserts, screw connection

Contact inserts *revos* POWER

4-/6-pole + ground
690 V
Size 16

Description	Type	Part No.	P.U.
Contact inserts *revos* POWER	**4-/6-pole + ground**		
Male insert	POW STS 4/6 DA D AG	72.215.1053.0	10
Female insert	POW BUS 4/6 DA D AG	72.205.1053.0	10

Technical data	
Rated voltage	690 V
Rated voltage according to UL/CSA	600 V
Rated impulse voltage	8 kV
Rated current	4 Contacts 35 A / 6 Contacts 16 A
Degree of pollution	3
Rated cross section	
EN 60999	4 x 2.5 – 6 mm² and 6 x 1 – 2.5 mm²
UL	4 x 14 – 8 AWG and 6 x 16 – 12 AWG
CSA	4 x 14 – 8 AWG and 6 x 16 – 12 AWG
Contacts	
Material	Copper alloy
Surface	>16 A Ag / 16 A Sn
Insulation strip length	10 mm / 7 mm
Contact resistance	≤ 1.0 mΩ
Mating cycles	200
Screws	head design / recomm. torque
Mounting screws	H1 / 0.5 – 0.7 Nm
Clamping screws	4 x H1 / 1.2 – 1.6 Nm / 6 x H1 / 0.5 – 0.7 Nm
Ground conductor screws	M5 / 2.0 – 2.5 Nm
Temperature range	-40 … +120 °C

Housing *revos* BASIC	Type	Page
Size	16H	146, 150, 156, 158, 162
Size	16XL	159

Dimensions

4-/6-pole + ground 690 V

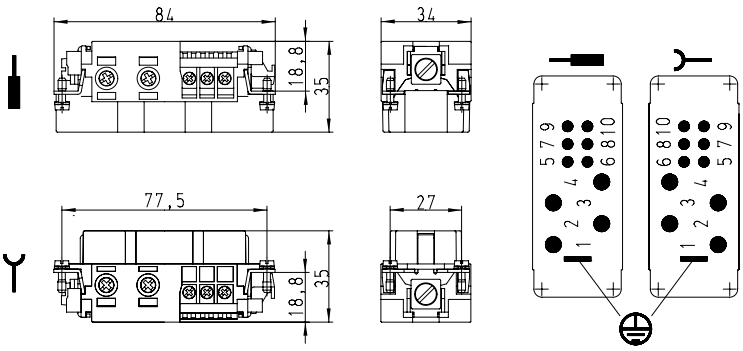

Derating curve
according to IEC 60512 sec. 3
72.215/205.1053.0 *revos* POWER
6+4-pole 690 V
35 A / 16 A / 6,0 mm² / 2.5 mm²

Corrected current AC [A]

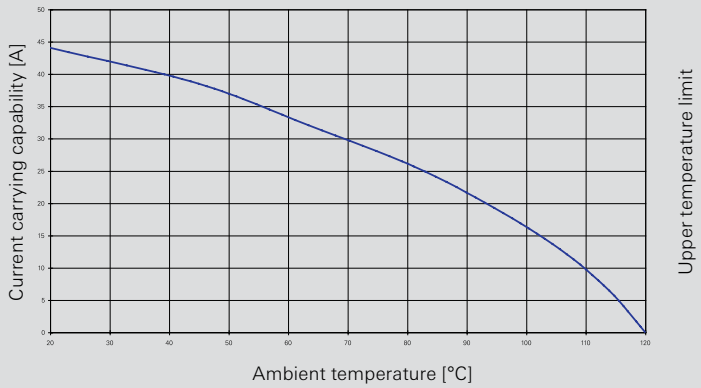

400/690 V 40 A + 230/400 V 16 A
Contact inserts, screw connection

Contact inserts ***revos*** POWER

6-/6-pole + ground
Size 16/16XL

Description	Type	Part No.	P.U.
Contact inserts *revos* POWER	**6-/6-pole + ground**		
Male insert	POW STS 6/6 GC CA AG	72.215.1253.0	10
Female insert	POW BUS 6/6 GC CA AG	72.205.1253.0	10

Technical data	
Rated voltage	L-PE 400 V / L-L 690 V and L-PE 230 V / L-L 400 V
Rated voltage according to UL/CSA	600 V
Rated impulse voltage	6 Contacts 6 kV / 6 Contacts 4 kV
Rated current	6 Contacts 40 A / 6 Contacts 16 A
Degree of pollution	3
Rated cross section	
EN 60999	6 x 4 – 10 mm² and 6 x 1 – 2.5 mm²
UL	6 x 12 – 16 AWG and 6 x 16 – 12 AWG
CSA	6 x 12 – 16 AWG and 6 x 16 – 12 AWG
Contacts	
Material	Copper alloy
Surface	>16 A Ag / 16 A Sn
Insulation strip length	10 mm / 7 mm
Contact resistance	≤ 1.5 mΩ
Mating cycles	200
Screws	head design / recomm. torque
Mounting screws	H1 / 0.5 – 0.7 Nm
Clamping screws	6 x H1 / 0.5 – 0.7 Nm / 6 x M5 / 0.8 – 1.0 Nm
Ground conductor screws	M5 / 2.0 – 2.5 Nm
Temperature range	-40 … +120 °C

Description	Type	Part No.	P.U.
Housing *revos* BASIC			
Hood, Size 16 XL	POW GOT GA 16 M40 69 A2	72.250.1635.2	1
Open-bottom base, Size 16	BAS GUT GA 16 69 A	72.320.1628.0	1

Dimensions

6-/6-pole + ground

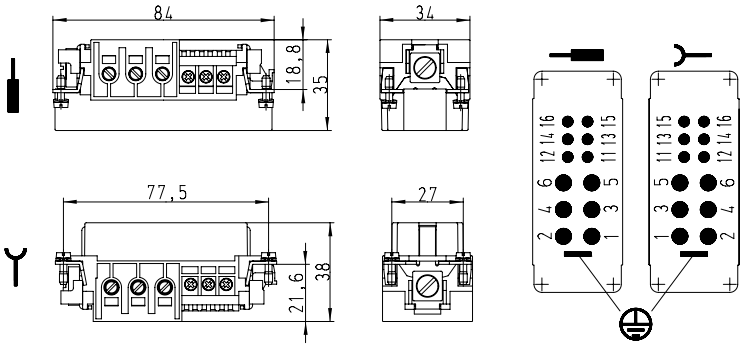

Derating curve
according to IEC 60512 sec. 3

72.205/215.1253.0 ***revos*** POWER
6+6-pole 690 V / 400 V / 230 V
40 A / 16 A / 10.0 mm² / 2.5 mm²

Corrected current AC [A]

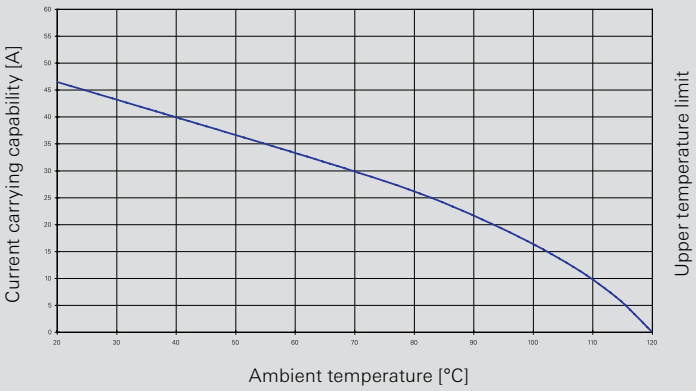

400/690 V 100 A + 400/690 V 40 A + 230/400 V 16 A
Contact inserts, screw connection

Contact inserts *revos* POWER

3-/3-/6-pole + ground
Size 24/24XL

Description	Type	Part No.	P.U.
Contact inserts *revos* POWER	**3-/3-/6-pole + ground**		
Male insert	POW STS 3/3/6 HEA CA AG	72.213.1253.0	10
Female insert	POW BUS 3/3/6 HEA CA AG	72.203.1253.0	10

Technical data	
Rated voltage	L-PE 400 V / L-L 690 V and L-PE 400 V / L-L 690 V and L-PE 230 V / L-L 400 V
Rated voltage according to UL/CSA	600 V
Rated impulse voltage	3 Contacts 6 kV / 3 Contacts 6 kV / 6 Contacts 4 kV
Rated current	3 Contacts 100 A / 3 Contacts 40 A / 6 Contacts 16 A
Degree of pollution	3
Rated cross section	
EN 60999	3 x 10 – 25 mm² and 3 x 4 – 10 mm² and 6 x 1 – 2.5 mm²
UL	3 x 8 – 4 AWG and 3 x 12 – 8 AWG and 6 x 18 – 14 AWG
CSA	3 x 8 – 4 AWG and 3 x 12 – 8 AWG and 6 x 18 – 14 AWG
Contacts	
Material	Copper alloy
Surface	>16 A Ag / 16 A Sn
Insulation strip length	14 mm / 10 mm / 7 mm
Contact resistance	≤ 1.5 mΩ
Mating cycles	200
Screws	head design / recomm. torque
Mounting screws	H1 / 0.5 – 0.7 Nm
Clamping screws	3 x M6 / 1.2 – 1.6 Nm and 3 x M5 / 0.8 – 1.0 Nm and 6 x H1 / 0.5 – 0.7
Ground conductor screws	M5 / 2.0 – 2.5 Nm
Temperature range	-40 … +120 °C

Description	Type	Part No.	P.U.
Housing *revos* BASIC			
Hood, Size 24 XL	POW GOT GA 24 M50 69 A2	72.250.2435.2	1
Open-bottom base, Size 24	BAS GUT GA 24 69 A	72.320.2428.0	1

Dimensions

3-/3-/6-pole + ground

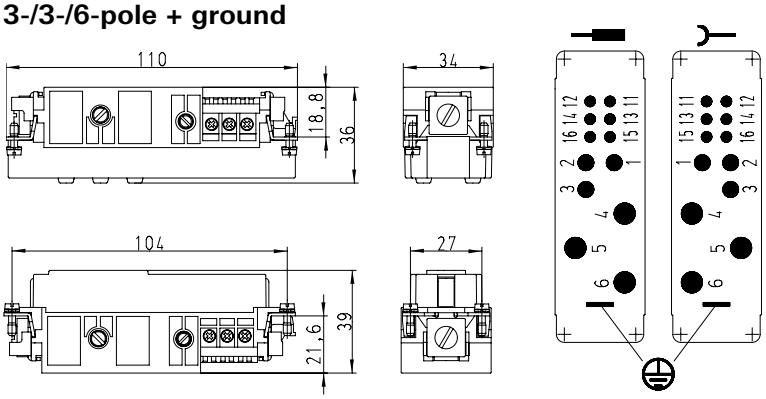

Derating curve
according to IEC 60512 sec. 3

72.203/213.1253.0 *revos* POWER
3+3+6-pole 690 V / 230 V
100 A / 40 A / 16 A
25 mm² / 16.0 mm² / 2.5 mm²

Corrected current AC [A]

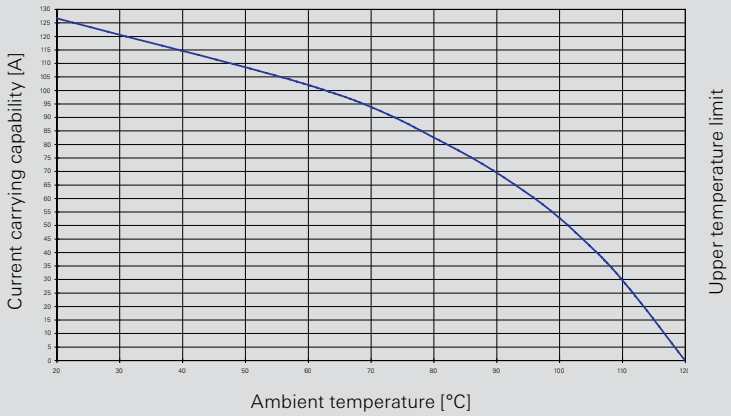

690 V 82 A + 400 V 16A
Contact inserts, screw connection

Contact inserts ***revos*** POWER

4-/2-pole + ground
690/400 V
Size 16

Description	Type	Part No.	P.U.
Contact inserts *revos* POWER	**4-/2-pole + ground**		
Male insert	POW STS 4/2 FA DB AG	72.215.0653.0	10
Female insert	POW BUS 4/2 FA DB AG	72.205.0653.0	10

Technical data	
Rated voltage	690 V and 400 V
Rated voltage according to UL/CSA	600 V
Rated impulse voltage	8 kV / 6 kV
Rated current	4 Contacts 82 A (CSA 70 A) / 2 Contacts 16 A
Degree of pollution	3
Rated cross section	
EN 60999	4 x 6 – 16 mm² and 2 x 1 – 2.5 mm²
UL	4 x 10 – 4 AWG and 2 x 16 – 12 AWG
CSA	4 x 10 – 4 AWG and 2 x 16 – 12 AWG
Contacts	
Material	Copper alloy
Surface	>16 A Ag / 16 A Sn
Insulation strip length	15 mm / 9 mm
Contact resistance	≤ 1.5 mΩ
Mating cycles	200
Screws	head design / recomm. torque
Mounting screws	H1 / 0.5 – 0.7 Nm
Clamping screws	4 x M6 / 1.2 – 1.6 Nm / 2 x H1 / 0.5 – 0.7 Nm
Ground conductor screws	M5 / 2.0 – 2.5 Nm
Temperature range	-40 … +120 °C

Housing *revos* BASIC	Type	Page
Hood, Size	16H	146, 150, 156, 158, 162
Hood, Size	16XL	159
Open-bottom base, Size	16	148, 160
Closed-bottom base, Size	16H	150, 162

Dimensions

4-/2-pole + ground 690/400 V

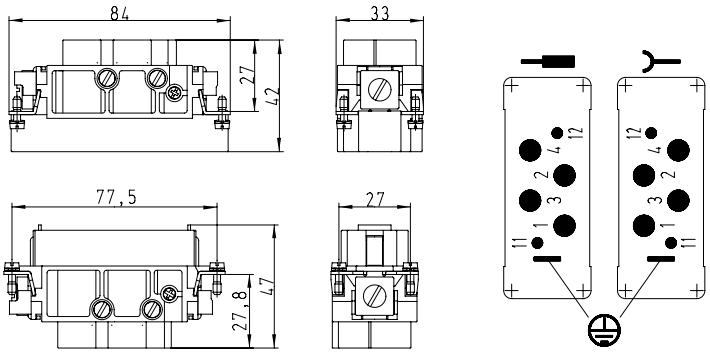

Derating curve

according to IEC 60512 sec. 3
72.205/215.0653.0 ***revos*** POWER
4+2-pole 690 V / 400 V
82 A / 16 A / 16.0 mm² / 2.5 mm²

Corrected current AC [A]

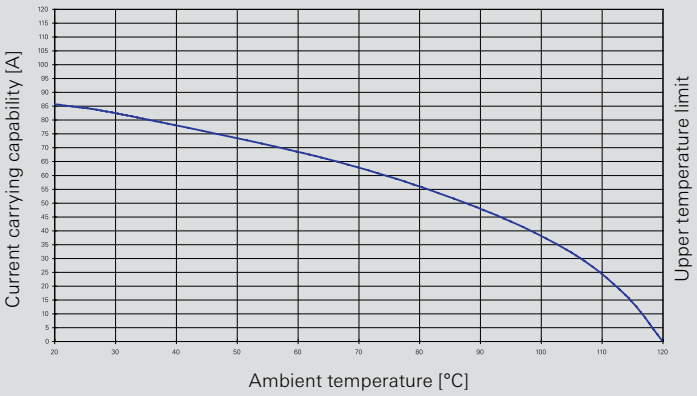

400 V 80 A + 400 V 16 A
Contact inserts, screw connection

Contact inserts *revos* POWER

4-/8-pole + ground
400 V
Size 24

Note: The protective earth connection must be provided with the respective cable lug for 10 mm² and 16 mm² cross-sections.

Description	Type	Part No.	P.U.
Contact insert *revos* POWER	**4-/8-pole + ground**		
Male insert	POW STS 4/8 NL BB AG	72.216.1253.0	5
Female insert	POW BUS 4/8 NL BB AG	72.206.1253.0	5

Technical data	
Rated voltage	400 V
Rated voltage according to UL	600 V
Rated impulse voltage	4 Contacts 6 kV / 8 Contacts 6 kV
Rated current	4 Contacts 80 A / 8 Contacts 16 A
Degree of pollution	3
Rated cross section	
EN 60999	4 x 1.5 – 16 mm² and 8 x 0.5 – 2.5 mm²
UL	4 x 16 – 6 AWG and 8 x 20 – 14 AWG
CSA	–
Contacts	
Material	Copper alloy
Surface	Ag
Insulation strip length	Power contacts 14 mm / Control contacts 7.5 mm
Contact resistance	Power contacts ≤ 0.3 mΩ / Control contacts ≤ 1 mΩ
Mating cycles	500
Screws	head design / recomm. torque
Mounting screws	4 x M3 / 0.5 Nm
Ground conductor screws	M5 / 2.0 Nm
Temperature range	-40 … +120 °C

Description	Type	Part No.	P.U.
Accessories			
Fork cable lug for protective earth connection 10mm²		06.600.6127.6	10
Fork cable lug for protective earth connection 16mm²		06.600.6227.6	10
Crimping tool		95.101.0800.0	1
Crimping die for connection range 10 mm²		05.502.2800.0	1
Crimping die for connection range 16 mm²		05.502.2900.0	1
Housing *revos* BASIC	24/24H	Page 164–183, 190-191	

Dimensions

4-/8-pole + ground 400 V

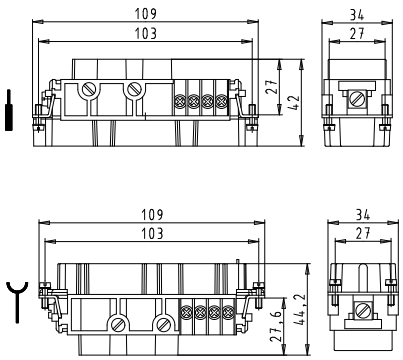

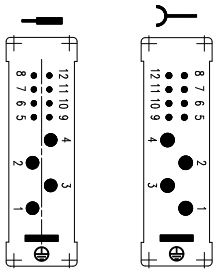

Clamping screws							
Power contacts							
Rated cross section	mm²	1,5	2,5	4	6	10	16
Tightening torque	Nm	1,2	2	3	3	3	3
Insulation strip length	mm	14					
Control contacts							
Rated cross section	mm²	0,5 – 2,5					
Tightening torque	Nm	0,5					
Insulation strip length	mm	7,5					

Derating curve – power contacts

according to IEC 60512 sec. 3
72.206/216.1253.0 *revos* POWER
4-/8-pole / 400 V

Cross-section 10 mm²
Cross-section 16 mm²

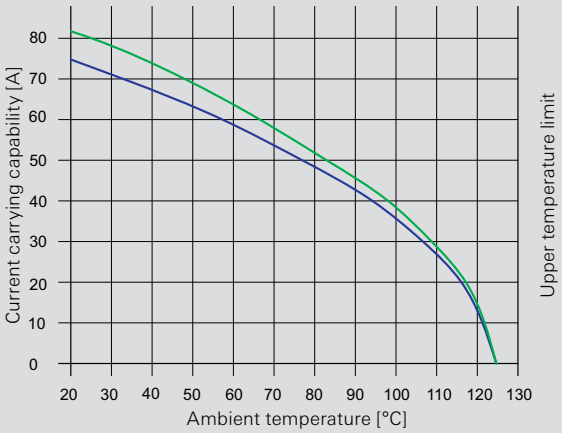

690 V 40 A + 250 V 10 A
Contact inserts, crimp connection

Contact inserts *revos* POWER

c UL us

12-/2-pole + ground
Size 16H

Description	Type		Part No.	P.U.
Contact inserts *revos* POWER	**12-/2-pole + ground**			
Male insert	POW STC 12/2 DE		72.713.1453.0	5
Female insert	POW BUC 12/2 DE		72.703.1453.0	5
Contact	mm²	/ AWG, turned Ø 4 mm		
Male insert, Ag	1.5	/16	05.545.9200.8	100
Female insert, Ag	1.5	/16	02.126.6700.8	100
Male insert, Ag	2.5	/14	05.545.9300.8	100
Female insert, Ag	2.5	/14	02.126.6800.8	100
Male insert, Ag	4	/12	05.545.9400.8	100
Female insert, Ag	4	/12	02.126.6900.8	100
Male insert, Ag	6	/10	05.545.9500.8	100
Female insert, Ag	6	/10	02.126.7000.8	100
Contact	mm²	/ AWG, turned Ø 1,6 mm		
Male insert, Ag	0.14-0.37	/26-22	05.545.7900.8	100
Female insert, Ag	0.14-0.37	/26-22	02.126.5400.8	100
Male insert, Ag	0.5	/20	05.545.8000.8	100
Female insert, Ag	0.5	/20	02.126.5500.8	100
Male insert, Ag	0.75	/18	05.545.8100.8	100
Female insert, Ag	0.75	/18	02.126.5600.8	100
Male insert, Ag	1.0	/18	05.545.8200.8	100
Female insert, Ag	1.0	/18	02.126.5700.8	100
Male insert, Ag	1.5	/16	05.545.8300.8	100
Female insert, Ag	1.5	/16	02.126.5800.8	100

Technical data	
Rated voltage	690 V + 250 V
Rated voltage according to UL/CSA	600 V
Rated impulse voltage	12 Contacts 8 kV/ 2 Contacts 4 kV
Rated current	12 Contacts 40 A/ 2 Contacts 10 A
Degree of pollution	3
Rated cross section	
EN 60999	12 x 1.5 – 6 mm² + 2 x 0.14 – 2.5 mm²
UL	12 x 16 – 10 AWG + 2 x 26 – 14 AWG
CSA	12 x 16 – 10 AWG + 2 x 26 – 14 AWG
Contacts	
Material	Kupferlegierung
Surface	Ag
Insulation strip length	Power contacts ≤ 0.3 mΩ / Control contacts ≤ 3 mΩ
Mating cycles	500
Screws	head design / recomm. torque
Mounting screws	4 x M3 / 0.5 Nm
Ground conductor screws	M5 / 2.0 Nm
Temperature range	-40 … +120 °C

Description	Type	Part No.	P.U.
Accessories			
Crimping tool		95.101.0800.0	1
Crimping die for contacts Ø 4 mm	„H“	05.502.5000.0	1
Contacting for contacts Ø 4 mm	„6“	05.502.5200.0	1
Crimping die for contacts Ø 1.6 mm	„G“	05.502.4900.0	1
Contacting for contacts Ø 1.6 mm	„5“	05.502.5100.0	1
Extraction tool for crimp contacts	40 A / Ø 4 mm	05.502.4400.0	1
Extraction tool for crimp contacts	10 A/ Ø 1.6 mm	05.502.0710.0	1
Housing *revos* BASIC	Type	Page	
Size	16H	146, 150, 156, 158, 162, 190, 191	

Dimensions

12-/2-pole + ground

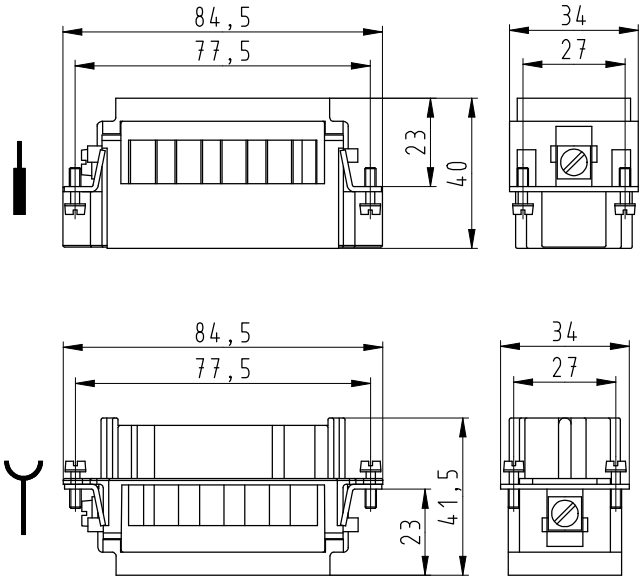

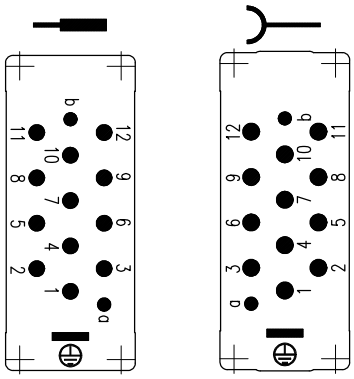

Derating curve – power contacts

according to IEC 60512 sec 3
revosPOWER 12-/2-pole

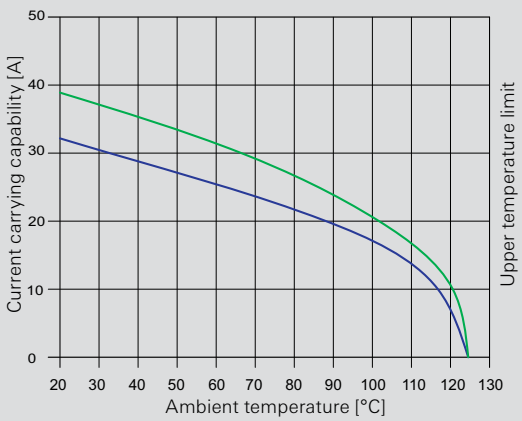

690 V 40 A + 160 V 10 A
Contact inserts, crimp connection

Contact inserts *revos* POWER

c UL us

6-/36-pole + ground
Size 16H

Description	Type		Part No.	P.U.
Contact inserts *revos* POWER	**6-/36-pole + ground**			
Male insert	POW STC 6/36 DF		72.713.4253.0	5
Female insert	POW BUC 6/36 DF		72.703.4253.0	5
Contacts	mm²	/ AWG, turned Ø 4 mm		
Male insert, Ag	1,5	/16	05.545.9200.8	100
Female insert, Ag	1,5	/16	02.126.6700.8	100
Male insert, Ag	2,5	/14	05.545.9300.8	100
Female insert, Ag	2,5	/14	02.126.6800.8	100
Male insert, Ag	4	/12	05.545.9400.8	100
Female insert, Ag	4	/12	02.126.6900.8	100
Male insert, Ag	6	/10	05.545.9500.8	100
Female insert, Ag	6	/10	02.126.7000.8	100
Contacts	mm²	/ AWG, turned Ø 1,6 mm		
Male insert, Ag	0,14-0,37	/26-22	05.545.7900.8	100
Female insert, Ag	0,14-0,37	/26-22	02.126.5400.8	100
Male insert, Ag	0,5	/20	05.545.8000.8	100
Female insert, Ag	0,5	/20	02.126.5500.8	100
Male insert, Ag	0,75	/18	05.545.8100.8	100
Female insert, Ag	0,75	/18	02.126.5600.8	100
Male insert, Ag	1,0	/18	05.545.8200.8	100
Female insert, Ag	1,0	/18	02.126.5700.8	100
Male insert, Ag	1,5	/16	05.545.8300.8	100
Female insert, Ag	1,5	/16	02.126.5800.8	100

Technical data	
Rated voltage	690 V + 160 V
Rated voltage according to UL/CSA	600 V
Rated impulse voltage	6 Contacts 8 kV /36 Contacts 2.5 kV
Rated current	6 Contacts 40 A / 36 Contacts 10 A
Degree of pollution	3
Rated cross section	
EN 60999	6 x 1,5 – 6 mm² + 36 x 0.14 – 2.5 mm²
UL	6 x 16 – 10 AWG + 36 x 26 – 14 AWG
CSA	6 x 16 – 10 AWG + 36 x 26 – 14 AWG
Contacts	
Material	Copper alloy
Surface	Ag
Contact resistance	Power contacts ≤ 0.3 mΩ / Power contacts ≤ 3 mΩ
Mating cycles	500
Screws	head design / recomm. torque
Mounting screws	4 x M3 / 0.5 Nm
Ground conductor screws	M5 / 2.0 Nm
Temperature range	-40 … +120 °C

Description	Type	Part No.	P.U.
Accessories			
Crimping tool		95.101.0800.0	1
Crimping die for contacts Ø 4 mm	„H“	05.502.5000.0	1
Contacting for contacts Ø 4 mm	„6“	05.502.5200.0	1
Crimping die for contacts Ø 1.6 mm	„G“	05.502.4900.0	1
Contacting for contacts Ø 1.6 mm	„5“	05.502.5100.0	1
Extraction tool for crimp contacts	40 A / Ø 4 mm	05.502.4400.0	1
Extraction tool for crimp contacts	10 A/ Ø 1,6 mm	05.502.0710.0	1
Housing *revos* BASIC	Type	Page	
Size	16H	146, 150, 156, 158, 162, 190, 191	

Dimensions

6-/36-pole + ground

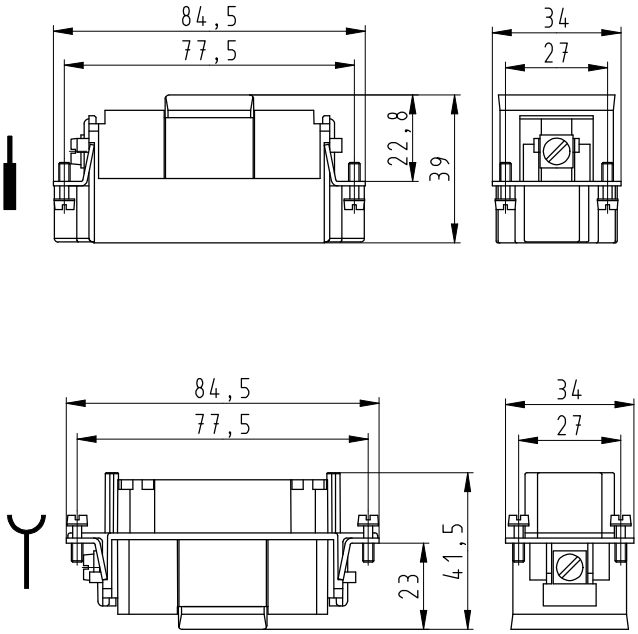

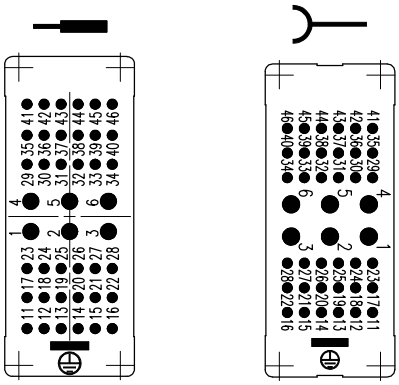

Derating curve – power contacts

according to IEC 60512 sec 3

revos POWER
6-/36-pole

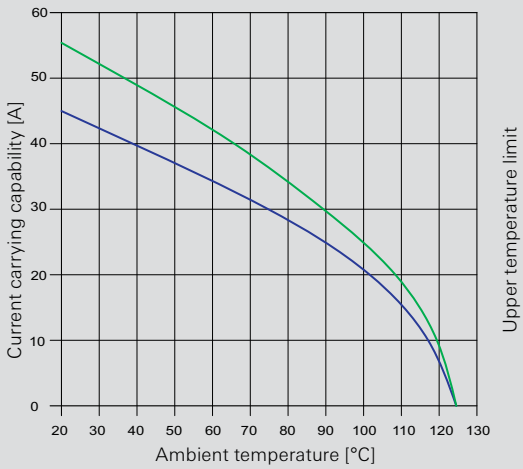

230/400 V 16 A + 250 V 10 A
Contact inserts, crimp connection

8-/24-pole + ground
Size 10/10H

Description	Type		Part No.	P.U.
Contact inserts *revos* POWER	**8-/24-pole + ground**			
Male insert	POW STC 8/24 AF		72.713.3253.0	5
Female insert	POW BUC 8/24 AF		72.703.3253.0	5
Contacts	mm²	/ AWG, turned Ø 2.5 mm		
Male insert, Ag	0.5	/20	05.545.8600.8	100
Female insert, Ag	0.5	/20	02.126.6100.8	100
Male insert, Ag	0.75	/18	05.545.8700.8	100
Female insert, Ag	0.75	/18	02.126.6200.8	100
Male insert, Ag	1.0	/18	05.545.8800.8	100
Female insert, Ag	1.0	/18	02.126.6300.8	100
Male insert, Ag	1.5	/16	05.545.8900.8	100
Female insert, Ag	1.5	/16	02.126.6400.8	100
Male insert, Ag	2.5	/14	05.545.9000.8	100
Female insert, Ag	2.5	/14	02.126.6500.8	100
Male insert, Ag	4	/12	05.545.9100.8	100
Female insert, Ag	4	/12	02.126.6600.8	100
Contacts	mm²	/ AWG, turned Ø 1.6 mm		
Male insert, Ag	0.14-0.37	/26-22	05.545.7900.8	100
Female insert, Ag	0.14-0.37	/26-22	02.126.5400.8	100
Male insert, Ag	0.5	/20	05.545.8000.8	100
Female insert, Ag	0.5	/20	02.126.5500.8	100
Male insert, Ag	0.75	/18	05.545.8100.8	100
Female insert, Ag	0.75	/18	02.126.5600.8	100
Male insert, Ag	1.0	/18	05.545.8200.8	100
Female insert, Ag	1.0	/18	02.126.5700.8	100
Male insert, Ag	1.5	/16	05.545.8300.8	100
Female insert, Ag	1.5	/16	02.126.5800.8	100

Technical data	
Rated voltage power / control contacts	p.c.: L-PE 230 V / L-L 400 V, c.c.: 160 V
Rated voltage according to UL/CSA	600 V/300 V
Rated impulse voltage	8 Contacts 4 kV / 24 Contacts 2.5 kV
Rated current	8 Contacts 16 A / 24 Contacts 10 kV
Degree of pollution	3
Rated cross section	
EN 60999	8 x 0,5 - 4 mm² + 24 x 0,14 - 2,5mm²
UL	8 x 20 - 12 AWG + 24 x 26 - 14 AWG
CSA	–
Contacts	
Material	Copper alloy
Surface	Ag
	Power contacts 7.5 mm / Control contacts 8 mm
Contact resistance	Power contacts ≤ 3 mΩ / Control contacts ≤ 1 mΩ
Mating cycles	500
Screws	head design / recomm. torque
Mounting screws	4 x M3 / 0.5 Nm
Ground conductor screws	M5 / 2.0 Nm
Temperature range	-40 … +120 °C

Description	Type	Part No.	P.U.
Accessories			
Crimping tool		95.101.0800.0	1
Crimping die for contacts Ø 2.5 mm	„G“	05.502.4900.0	1
Contact positioner for contacts Ø 2.5 mm	„5“	05.502.5100.0	1
Crimping die for contacts Ø 1.6 mm	„G“	05.502.4900.0	1
Contact positioner for contacts Ø 1.6 mm	„5“	05.502.5100.0	1
Extraction tool for crimp contacts	10 A/ Ø 1.6 mm	05.502.0710.0	1
Screw driver	1750 PH 0x60 031219	06.502.4900.0	1
Housing *revos* BASIC	Type	Page	
Size	10/10H	126–143, 190-192, 198, 200	

Dimensions

8-/24-pole + ground

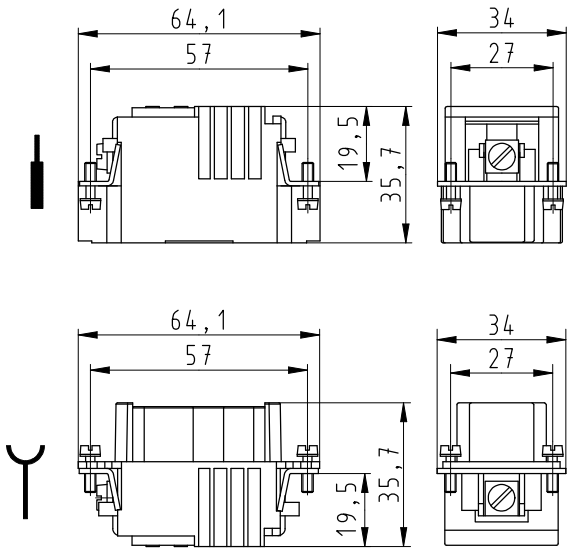

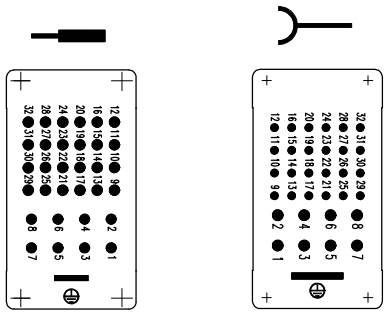

Disassembling the power contacts

1) Insert screwdriver (size 0 DIN ISO 8764-1-PH) up until stop in opening of the contact to be disassembled.

2) Pull contact out of the contact insert by its wire.

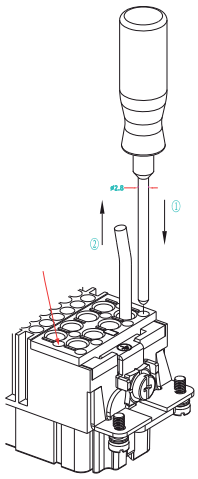

Derating curve – power contacts

according to IEC 60512 sec 3

revos POWER
6-/36-pole

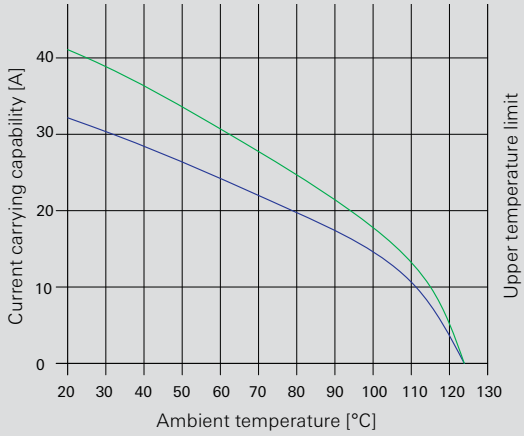

400 V and 690 V multipole adapter, screw connection

Multipole adapter *revos* POWER

6-pole + ground 400 V Size 16

Compatible with 72.200/210.0653.0

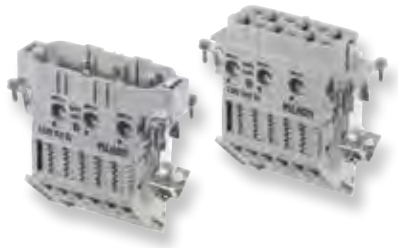

6-pole + ground 690 V Size 16

Compatible with 72.200/210.0653.0

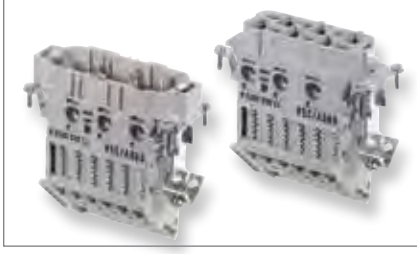

Description		Type	Part No.	P.U.
Multipole adapter *revos* POWER		**6-pole + ground 400 V**		
Male insert,	ground right	POW SAS WR 6 6,0 40 AG	70.015.0653.0	10
Female insert,	ground right	POW BAS WR 6 6,0 40 AG	70.005.0653.0	10
Male insert,	ground left	POW SAS WL 6 6,0 40 AG	70.010.0653.0	10
Female insert,	ground left	POW BAS WL 6 6,0 40 AG	70.000.0653.0	10
Multipole adapter *revos* POWER		**6-pole + ground 690 V**		
Male insert,	ground right	POW SAS WR 6 6,0 69 AG	72.015.0653.0	10
Female insert,	ground right	POW BAS WR 6 6,0 69 AG	72.005.0653.0	10
Male insert,	ground left	POW SAS WL 6 6,0 69 AG	72.010.0653.0	10
Female insert,	ground left	POW BAS WL 6 6,0 69 AG	72.000.0653.0	10

Technical data	**6-pole + ground 400 V**	**6-pole + ground 690 V**
Rated voltage	400 V	690 V
Rated impulse voltage	6 kV	8 kV
Rated voltage according to UL/CSA	600 V	
Rated current	35 A	
Degree of pollution	3	
Rated cross section		
EN 60999	2.5 – 6 mm²	
UL	14 – 8 AWG	
CSA	14 – 8 AWG	
Contacts		
Material	Copper alloy	
Surface	Ag	
Insulation strip length	12 mm	
Contact resistance	≤ 1 mΩ	
Mating cycles	200	
Screws	head design / recomm. torque	
Mounting screws	H1 / 0.5 – 0.7 Nm	
Clamping screws	H1 / 0.8 – 1.0 Nm	
Ground conductor screws	H1 / 1.2 – 1.6 Nm	
Temperature range	-40 … +120 °C	

Description	Type	Part No.	P.U.
Open-bottom base *revos* BASIC			
Size 16, double locking lever	BAS GUT GA 16 50 A	70.320.1628.0	1
Size 16, double locking lever	BAS GUT GE 16 50 A	70.325.1628.0	1
Size 16, single locking lever	BAS GUT GK 16 50 A	71.320.1628.0	1
Size 16, single locking lever	BAS GUT GP 16 50 A	71.325.1628.0	1

Dimensions

6-pole + ground 400 V and 690 V

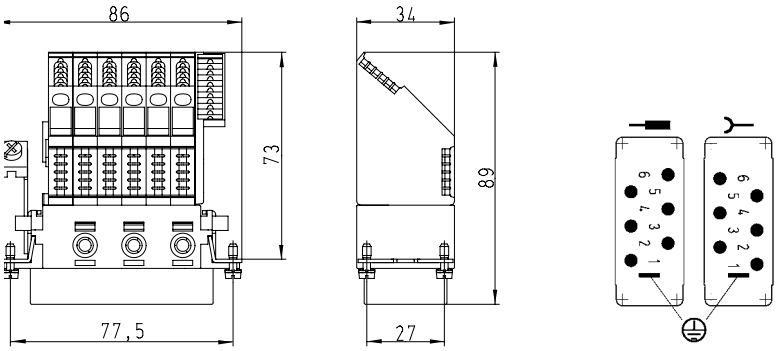

500 V multipole adapter, screw connection

Multipole adapter *revos* POWER

4-/6-pole + ground 500 V Size 16

Compatible with 72.205/210.1053.0

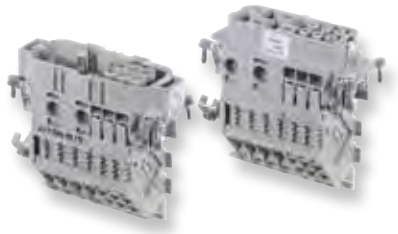

Description	Type	Part No.	P.U.
Multipole adapter *revos* POWER	**4-/6-pole + ground**		
Male insert, ground right	POW SAS WR 4/6 DB 69 AG	72.117.1053.0	10
Female insert, ground right	POW BAS WR 4/6 DB 69 AG	72.107.1053.0	10

Technical data	
Rated voltage	500 V
Rated voltage according to UL/CSA	600 V
Rated impulse voltage	6 kV
Rated current	35 A / 16 A
Degree of pollution	3
Rated cross section	
EN 60999	4 x 2.5 – 6 mm² and 6 x 1.5 – 4 mm²
UL	4 x 14 – 8 AWG and 6 x 16-12 AWG
CSA	4 x 14 – 8 AWG and 6 x 16-12 AWG
Contacts	
Material	Copper alloy
Surface	Ag / Sn
Insulation strip length	12 mm
Contact resistance	≤ 1.5 mΩ
Mating cycles	200
Screws	head design / recomm. torque
Mounting screws	H1 / 0.5 – 0.7 Nm
Clamping screws	6 x M3 / 0.5 – 0.7 Nm / 4 x M3.5 / 0.8 – 1.0 Nm
Ground conductor screws	H1 / 1.2 – 1.6 Nm
Temperature range	-40 … +120 °C

Description	Type	Part No.	P.U.
Open-bottom base *revos* BASIC			
Size 16, double locking lever	BAS GUT GA 16 A	70.320.1628.0	1
Size 16, double locking lever	BAS GUT GE 16 A	70.325.1628.0	1
Size 16, single locking lever	BAS GUT GK 16 A	71.320.1628.0	1
Size 16, single locking lever	BAS GUT GP 16 A	71.325.1628.0	1

Dimensions

4-/6-pole + ground 500 V

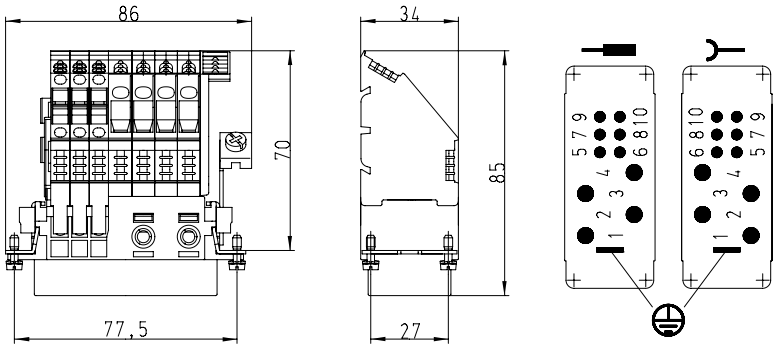

Data cable feed-through

Data cable feed-through ***revos*** IT

2 bushings

3 bushings

4 bushings

Description	Type	Part No.	P.U.
Data cable feed-through *revos* IT			
2 bushings, Size 10	IT DKE 10	70.060.1028.0	10
3 bushings, Size 16	IT DKE 16	70.060.1628.0	10
4 bushings, Size 24	IT DKE 24	70.060.2428.0	5
4 bushings, Size 24	IT DKE 24 R1	70.061.2428.0	5

Technical data	
Number of Bushings	
2 bushings	2
3 bushings	3
4 bushings	4
Cable diameter	
2 bushings	1 x 4.5 – 10 mm and 1 x 9 – 15 mm
3 bushings	2 x 4.5 – 10 mm and 1 x 9 – 15 mm
4 bushings (70.060.2428.0)	2 x 4.5 – 10 mm and 2 x 9 – 15 mm
4 bushings (70.061.2428.0)	4 x 4 – 9mm
Material	
Housing	Die cast aluminum
Gaskets	Neoprene (oil-resistant and anti-ageing)
Clamping screws	galvanically zinc-plated steel
Protection degree according to EN60529	IP 65
Temperature range	-40 … +100 °C

Description	Type	Part No.	P.U.
Accessories			
Rubber gasket for Connection range	4.5 mm – 10 mm	05.562.3183.0	20
Rubber gasket for Connection range	9 mm – 15 mm	05.562.3283.0	10
Housing Size 10		70.320.1028.0	
Housing Size 16		70.320.1628.0	
Housing Size 24		70.320.2428.0	

Dimensions

2 bushings

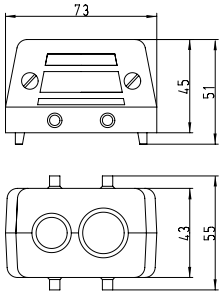

3 bushings

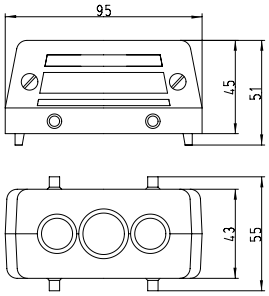

4 bushings

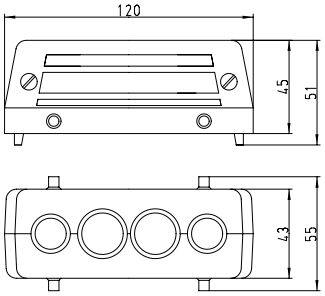

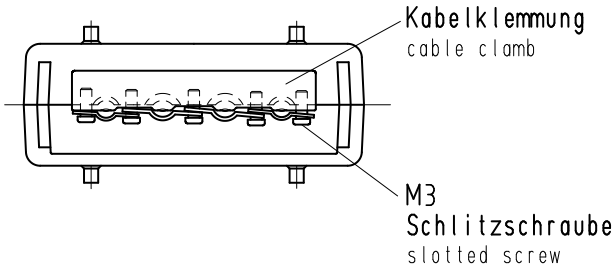

90 V contact inserts

Contact inserts *revos* Ex

6-pole + ground
Size 6

10-pole + ground
Size 10

16-pole + ground
Size 16

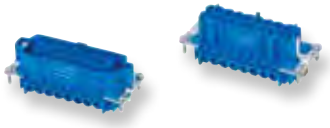

24-pole + ground
Size 24

48-pole + ground
Size 48

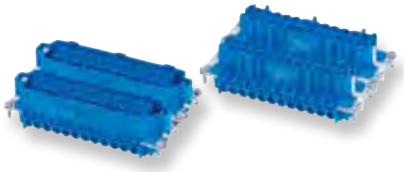

Description	Type	Part No.	P.U.
Contact inserts *revos* Ex 90 V	**6-pole + ground**		
Male insert	EX STS 6 2,5 09IA	72.310.0653.9	10
Female insert	EX BUS 6 2,5 09IA	72.300.0653.9	10
Male insert, AU	EX STS 6 2,5 09IA AU	72.311.0653.9	10
Female insert, AU	EX BUS 6 2,5 09IA AU	72.301.0653.9	10
Contact inserts *revos* Ex 90 V	**10-pole + ground**		
Male insert	EX STS 10 2,5 09IA	72.310.1053.9	10
Female insert	EX BUS 10 2,5 09IA	72.300.1053.9	10
Male insert, AU	EX STS 10 2,5 09IA AU	72.311.1053.9	10
Female insert, AU	EX BUS 10 2,5 09IA AU	72.301.1053.9	10
Contact inserts *revos* Ex 90 V	**16-pole + ground**		
Male insert	EX STS 16 2,5 09IA	72.310.1653.9	10
Female insert	EX BUS 16 2,5 09IA	72.300.1653.9	10
Male insert, AU	EX STS 16 2,5 09IA AU	72.311.1653.9	10
Female insert, AU	EX BUS 16 2,5 09IA AU	72.301.1653.9	10
Contact inserts *revos* Ex 90 V	**24-pole + ground**		
Male insert	EX STS 24 2,5 09IA	72.310.2453.9	10
Female insert	EX BUS 24 2,5 09IA	72.300.2453.9	10
Male insert, AU	EX STS 24 2,5 09IA AU	72.311.2453.9	10
Female insert, AU	EX BUS 24 2,5 09IA AU	72.301.2453.9	10
Contact inserts *revos* Ex 90 V	**48-pole + ground**		
Male insert with wire protection, marked 1-24, 25-48	EX STS 48 2,5 09IA	72.310.4853.9	5
Female insert with wire protection, marked 1-24, 25-48	EX BUS 48 2,5 09IA	72.300.4853.9	5

Technical data	
Rated voltage	90 V
Rated voltage according to UL/CSA	-
Rated impulse voltage	-
Rated current	Dependent on the wire cross section*)
Degree of pollution	3
Rated cross section	
EN 60999	0.5 – 2.5 mm²
UL	-
CSA	-
Contacts	
Material	Copper alloy
Surface	Sn. Au
Insulation strip length	7 mm
Contact resistance	≤ 1.5 mΩ
Mating cycles	Sn 200 / Au 500
Screws	head design / recomm. torque
Mounting screws	H1 / 0.5 – 0.7 Nm
Clamping screws	H1 / 0.5 – 0.7 Nm
Ground conductor screws	H2 / 1.2 – 1.6 Nm
Temperature range	-20 … +60 °C

Housing *revos* Ex	Type	Page
Size	6Ex	224–227
Size	10Ex	228–231
Size	16Ex	232–235
Size	24Ex	236–239
Size	48Ex	240–243

See section "facts & DATA" for handling and assembly of the multipole connectors.

0344 Ex I M1 Ex ia I

BVS 03 **ATEX** 184 X

EN 60079-0:2006 EN 60079-11:2007 EN 50303:2000

Special conditions for safe use:

1. The heavy duty connectors must be attached to a device in such a way that a minimum protection rating of IP54 is maintained in accordance with EN 60529.
2. The heavy duty connectors can be used in an ambient temperature ranges from -20 °C to +60 °C.

***Wire cross section**

Permitted wire cross section	**Max. input current**
1.5 mm² bis 2.5 mm²	16 A
1.0 mm²	10 A
0.75 mm²	6 A
0.5 mm²	3 A

Dimensions

6-pole + ground – 48-pole + ground

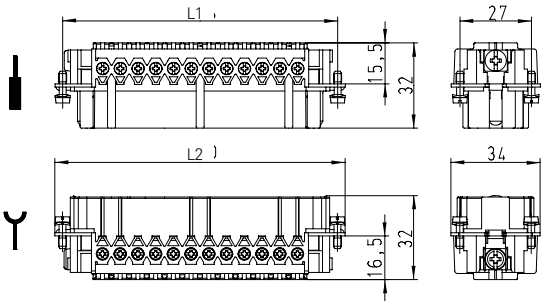

Number of poles	L1 [mm]	L2 [mm]
6	44.0	50.0
10	57.0	63.0
16	77.5	83.0
24	104.0	110.0
48	104.0	110.0

6-pole + ground

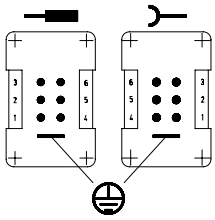

10-pole + ground

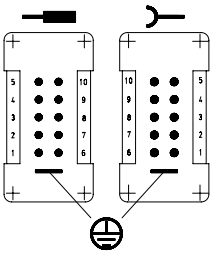

16-pole + ground

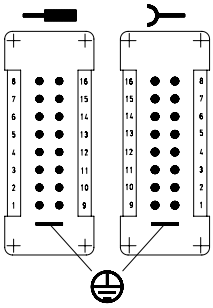

24-pole + ground

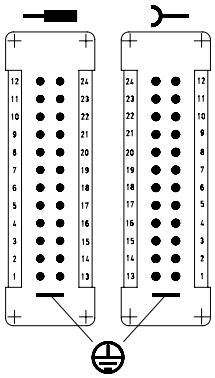

48-pole + ground

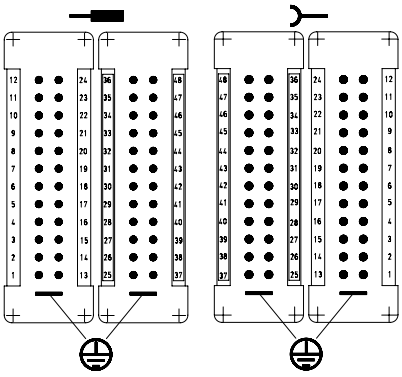

Modular connector system 3-pole

Modular inserts *revos* FLEX

3-pole

Description	Type	Part No.	P.U.
Modular inserts *revos* FLEX	**3-pole**		
Male insert	FLE STC 3 69	78.014.0353.0	10
Female insert	FLE BUC 3 69	78.004.0353.0	10
Contacts	mm^2 / AWG, turned Ø 3.6 mm		
Male insert, Ag (Crimping die B)	1.5 / 16	05.544.1829.8	100
Female insert, Ag (Crimping die B)	1.5 / 16	02.125.2929.8	100
Male insert, Ag (Crimping die B)	2.5 / 14	05.544.1929.8	100
Female insert, Ag (Crimping die B)	2.5 / 14	02.125.3029.8	100
Male insert, Ag (Crimping die D)	4 / 12	05.544.3129.8	100
Female insert, Ag (Crimping die D)	4 / 12	02.125.3129.8	100
Male insert, Ag (Crimping die D)	6 / 10	05.544.3229.8	100
Female insert, Ag (Crimping die D)	6 / 10	02.125.3229.8	100
Male insert, Ag (Crimping die D)	10 / 8	05.544.3329.8	100
Female insert, Ag (Crimping die D)	10 / 8	02.125.3329.8	100

Technical data	
Rated voltage	630 V
Rated voltage according to UL/CSA	600 V
Rated impulse voltage	8 kV
Rated current	40 A (UL 40 A, CSA 35 A)
Degree of pollution	3
Insulation strip length	10 mm
Contact resistance	≤ 1 mΩ
Mating cycles	500
Insulating material	Polycarbonate, halogen-free
Flammability	UL 94 V-0
Temperature range	-40 … +120 °C
Derating curve	Page 95

Description	Type	Part No.	P.U.
Accessories			
Crimping tool		95.101.0800.0	1
Crimping die	"B"	05.502.2100.0	1
Crimping die	"D"	05.502.2300.0	1
Contact positioner	"1"	05.502.3100.0	1
Extraction tool		05.502.0910.0	1
Extraction tool for modular inserts		05.502.1010.0	1

Dimensions

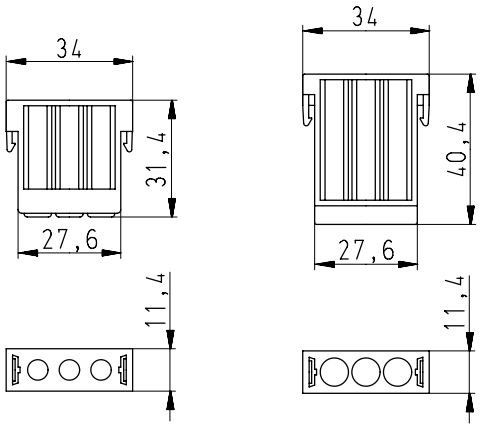

Modular connector system 4-pole + ground

Modular inserts *revos* FLEX

4-pole + ground

Description	Type	Part No.	P.U.
Modular inserts *revos* FLEX	**4-pole + ground**		
Male insert	FLE STC 4P 1K	78.013.0453.0	10
Female insert	FLE BUC 4P 1K	78.003.0453.0	10
Contacts	mm^2 / AWG, stamped Ø 2.5 mm		
Male insert, Ag	0.5 – 1.5 / 20 – 16	05.544.3429.8	100
Female insert, Ag	0.5 – 1.5 / 20 – 16	02.125.3429.8	100
Male insert, Ag	1.5 – 2.5 / 16 – 14	05.544.3529.8	100
Female insert, Ag	1.5 – 2.5 / 16 – 14	02.125.3529.8	100

Technical data	
Rated voltage	1000 V
Rated voltage according to UL/CSA	600 V
Rated impulse voltage	8 kV
Rated current	16 A (UL 13 A, CSA 16 A)
Degree of pollution	3
Insulation strip length	4 mm
Contact resistance	≤ 5 mΩ
Mating cycles	500
Insulating material	Polyamide 6.6 GF, halogen-free
Flammability	UL 94 V-0
Temperature range	-40 … +120 °C
Derating curve	Page 95

Description	Type	Part No.	P.U.
Accessories			
Crimping tool		95.101.0800.0	1
Crimping die	"C"	05.502.2200.0	1
Contact positioner	"2"	05.502.3200.0	1
Extraction tool		05.502.0610.0	1
Extraction tool for modular inserts		05.502.1010.0	1

Dimensions

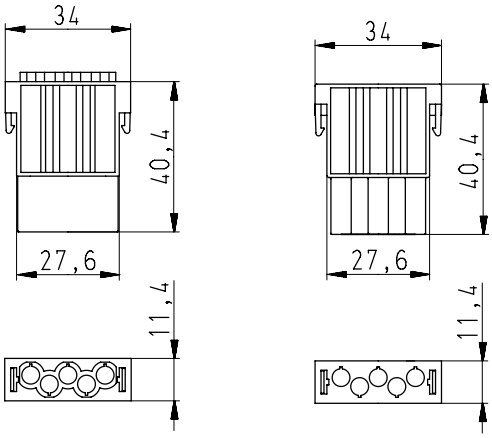

Modular connector system 5-pole

Modular inserts *revos* FLEX

5-pole

Description	Type	Part No.	P.U.
Modular inserts *revos* FLEX	**5-pole**		
Male insert	FLE STC 5 25	78.013.0553.0	10
Female insert	FLE BUC 5 25	78.003.0553.0	10
Contacts	mm² / AWG, turned Ø 2.5 mm		
Male insert, Ag	0.5 / 20	05.544.3629.8	100
Female insert, Ag	0.5 / 20	02.125.3629.8	100
Male insert, Ag	0.75 – 1.0 / 18	05.544.3729.8	100
Female insert, Ag	0.75 – 1.0 / 18	02.125.3729.8	100
Male insert, Ag	1.5 / 16	05.544.3829.8	100
Female insert, Ag	1.5 / 16	02.125.3829.8	100
Male insert, Ag	2.5 / 14	05.544.3929.8	100
Female insert, Ag	2.5 / 14	02.125.3929.8	100
Male insert, Ag	4 / 12	05.544.4029.8	100
Female insert, Ag	4 / 12	02.125.4029.8	100

Technical data	
Rated voltage	250 V
Rated voltage according to UL/CSA	UL 400 V, CSA 600 V
Rated impulse voltage	6 kV
Rated current	20 A (UL 20 A, CSA 16 A)
Degree of pollution	3
Insulation strip length	8 mm
Contact resistance	≤ 2 mΩ
Mating cycles	500
Insulating material	Polycarbonate, halogen-free
Flammability	UL 94 V-0
Temperature range	-40 … +120 °C
Derating curve	Page 95

Description	Type	Part No.	P.U.
Accessories			
Crimping tool		95.101.0800.0	1
Crimping die	"B"	05.502.2100.0	1
Contact positioner	"1"	05.502.3100.0	1
Extraction tool		05.502.0810.0	1
Extraction tool for modular inserts		05.502.1010.0	1

Dimensions

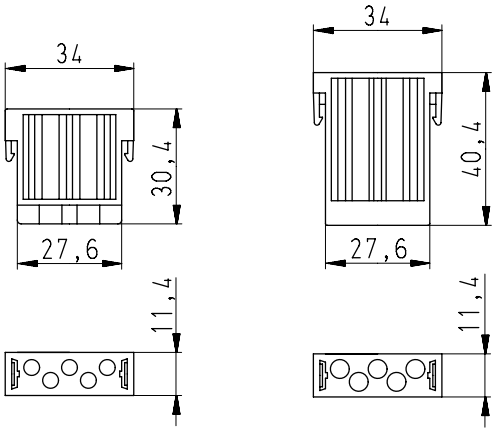

Modular connector system 10-pole

Modular inserts *revos* FLEX

10-pole

Description	Type	Part No.	P.U.
Modular inserts *revos* FLEX	**10-pole**		
Male insert	FLE STC 10 25	78.012.1053.0	10
Female insert	FLE BUC 10 25	78.002.1053.0	10

Technical data	
Rated voltage	250 V
Rated voltage according to UL/CSA	UL 240 V, CSA 600 V
Rated impulse voltage	4 kV
Rated current	10 A
Degree of pollution	3
Insulation strip length	8 mm
Contact resistance	≤ 5 mΩ
Mating cycles	500
Insulating material	Polycarbonate, halogen-free
Colour	gray
Flammability	UL 94 V-0
Temperature range	-40 … +120 °C
Derating curve	Page 95

Modular inserts *revos* FLEX	**10-pole**		
Male insert	FLE STC 10 40 sw	78.012.1053.1	10
Female insert	FLE BUC 10 40 sw	78.002.1053.1	10

Technical data	
Rated voltage	400 V
Rated voltage according to UL	UL 600 V
Rated impulse voltage	4 kV
Rated current	10 A
Degree of pollution	3
Insulation strip length	8 mm
Contact resistance	≤ 5 mΩ
Mating cycles	500
Insulating material	PA, halogen-free
Colour	black
Flammability	UL 94 V-0
Temperature range	-40 … +100 °C
Derating curve	Page 95

Modular inserts *revos* FLEX

10-pole

Description	Type	Part No.	P.U.
Contacts	mm² / AWG, turned Ø 1.6 mm		
Male insert, Ag	0.14 – 0.37 / 26 – 22	05.544.4129.8	100
Female insert, Ag	0.14 – 0.37 / 26 – 22	02.125.4129.8	100
Male insert, Ag	0.5 / 20	05.544.4229.8	100
Female insert, Ag	0.5 / 20	02.125.4229.8	100
Male insert, Ag	0.75 – 1.0 / 18	05.544.4329.8	100
Female insert, Ag	0.75 – 1.0 / 18	02.125.4329.8	100
Male insert, Ag	1.5 / 16	05.544.4429.8	100
Female insert, Ag	1.5 / 16	02.125.4429.8	100
Male insert, Ag	2.5 / 14	05.544.4529.8	100
Female insert, Ag	2.5 / 14	02.125.4529.8	100
Male insert, LWL POF	Ø 1.6 mm	05.544.8121.0	5
Female insert, LWL POF	Ø 1.6 mm	02.125.2421.0	5

Accessories			
Crimping tool		95.101.0800.0	1
Crimping die	"B"	05.502.2100.0	1
Contact positioner	"1"	05.502.3100.0	1
Extraction tool		05.502.0710.0	1
Extraction tool for modular inserts		05.502.1010.0	1
Set of tools for optical fiber POF contacts		95.101.2000.0	1

Dimensions

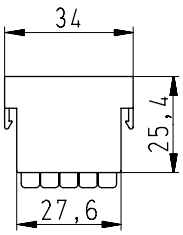

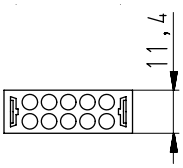

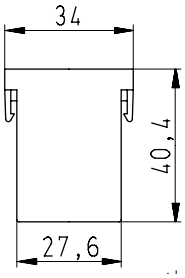

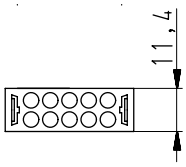

Modular connector system

Modular inserts revos FLEX

20-pole

Description	Type	Part No.	P.U.
Modular inserts revos FLEX	**20-pole**		
Male insert	FLE STC 20 10	78.011.2053.0	10
Female insert	FLE BUC 20 10	78.001.2053.0	10
Contacts	mm² / AWG, stamped Ø 1.0 mm		
Male insert, Au	0.09 – 0.25 / 28 – 24	05.544.4629.7	100
Female insert, Au	0.09 – 0.25 / 28 – 24	02.125.4629.7	100
Male insert, Au	0.25 – 0.5 / 24 – 20	05.544.4729.7	100
Female insert, Au	0.25 – 0.5 / 24 – 20	02.125.4729.7	100

Technical data	
Rated voltage	100 V
Rated voltage according to UL/CSA	60 V
Rated impulse voltage	1,5 kV
Rated current	4 A (UL , CSA 5 A)
Degree of pollution	3
Insulation strip length	3 mm
Contact resistance	≤ 5 mΩ
Mating cycles	500
Insulating material	Polycarbonate, halogen-free
Flammability	UL 94 V-0
Temperature range	-40 … +120 °C
Derating curve	Page 95

Description	Type	Part No.	P.U.
Accessories			
Crimping tool		95.101.0800.0	1
Crimping die	"A"	05.502.2000.0	1
Contact positioner	"4"	05.502.3800.0	1
Hand crimping tool without contact positioner		95.101.2100.0	1
Hand crimping tool with contact positioner		95.101.2200.0	1
Insertion and extraction tool		05.502.0410.0	1
Extraction tool for modular inserts		05.502.1010.0	1

Modular inserts revos FLEX

Blind module

Description	Type	Part No.	P.U.
Modular inserts revos FLEX	**Blind module**		
Male		05.562.6353.0	10
Female		05.562.6453.0	10

Technical data	
Insulating material	Polyamide 66, halogen-free
Flammability	UL 94 V-0
Temperature range	-40 … +120 °C

Dimensions

20-pole

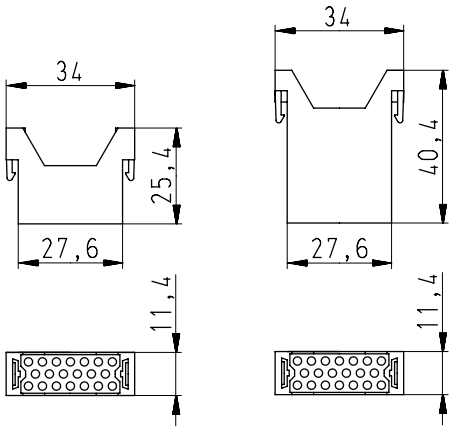

Blind module

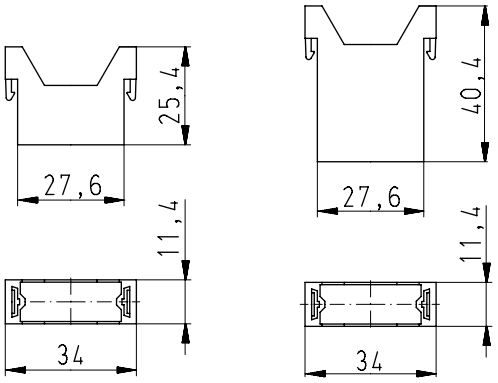

Derating curve

Derating curve
according to IEC 60512 sec. 3

revos FLEX
Size 6,
equipped with 2 modules

- Contact Ø 1 mm stamped, 0.5 mm², 2x20 poles
- Contact Ø 1.6 mm turned, 1.5 mm², 2x10 poles
- Contact Ø 2.5 mm turned, 2.5 mm², 2x5 poles
- Contact Ø 3.6 mm turned, 6 mm², 2x3 poles

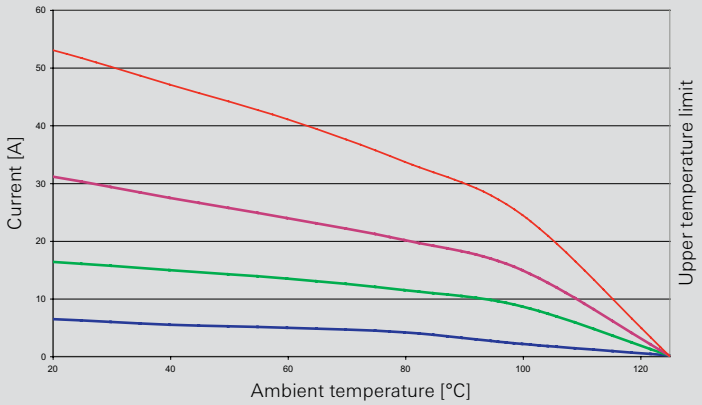

Derating curve
according to IEC 60512 sec. 3

revos FLEX
Size 10,
equipped with 3 modules

- Contact Ø 1 mm stamped, 0.5 mm², 3x20 poles
- Contact Ø 1.6 mm turned, 1.5 mm², 3x10 poles
- Contact Ø 2.5 mm turned, 2.5 mm², 3x5 poles
- Contact Ø 3.6 mm turned, 6 mm², 3x3 poles

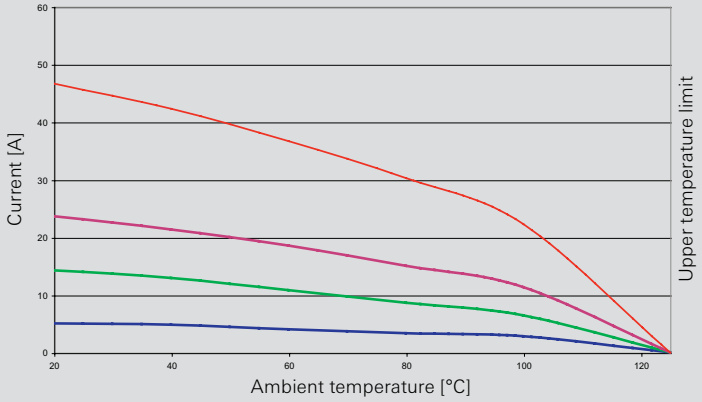

Derating curve
according to IEC 60512 sec. 3

revos FLEX
Size 16,
equipped with 5 modules

- Contact Ø 1 mm stamped, 0.5 mm², 5x20 poles
- Contact Ø 1.6 mm turned, 1.5 mm², 5x10 poles
- Contact Ø 2.5 mm turned, 2.5 mm², 5x5 poles
- Contact Ø 3.6 mm turned, 6 mm², 5x3 poles

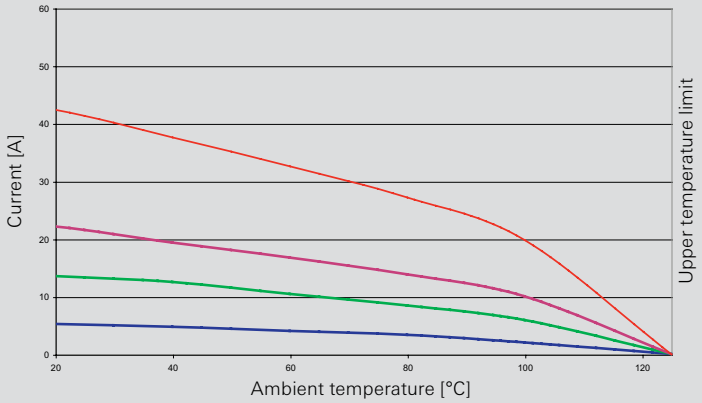

Derating curve
according to IEC 60512 sec. 3

revos FLEX
Size 24,
equipped with 7 modules

- Contact Ø 1 mm stamped, 0.5 mm², 7x20 poles
- Contact Ø 1.6 mm turned, 1.5 mm², 7x10 poles
- Contact Ø 2.5 mm turned, 2.5 mm², 7x5 poles
- Contact Ø 3.6 mm turned, 6 mm², 7x3 poles

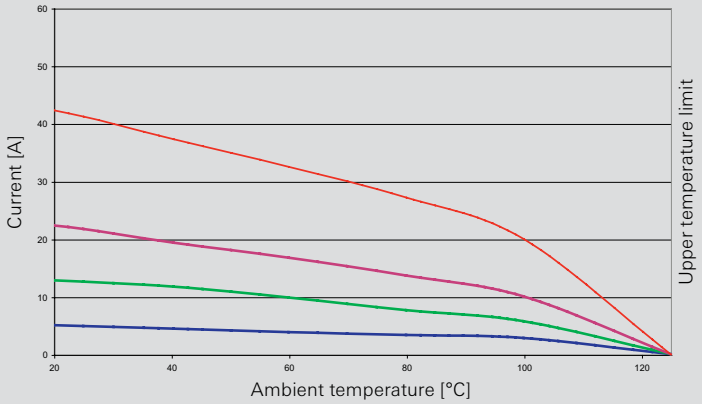

Modular connector system

Modular inserts *revos* FLEX

Pneumatic module 1 connection

Pneumatic module 2 connections

Description	Type	Part No.	P.U.
Modular inserts *revos* FLEX	**Pneumatic module Ø 2,5 mm**		
1 connection			
Male insert	FLE STP 1 2.5	78.913.0153.0	5
Female insert with valve	FLE BUP 1 2.5	78.903.0153.0	5
2 connections			
Male insert	FLE STP 2 2.5	78.913.0253.0	5
Female insert with valve	FLE BUP 2 2.5	78.903.0253.0	5
Modular inserts *revos* FLEX	**Pneumatic module Ø 4 mm**		
1 connection			
Male insert	FLE STP 1 4	78.914.0153.0	5
Female insert with valve	FLE BUP 1 4	78.904.0153.0	5
2 connections			
Male insert	FLE STP 2 4	78.914.0253.0	5
Female insert with valve	FLE BUP 2 4	78.904.0253.0	5

Technical data			
Hose connection	Type / Ø inside	Module Ø 2.5 mm / 2.5 mm	Module Ø 4 mm / 4 mm
Operational pressure		10 bar	
Material of the pneumatic contact		Brass MS 58	
Insulating material		Polyamide 6.6 GF	
Flammability class		UL 94 V-0	
Temperature range		-40 … +100 °C	

Dimensions

Pneumatic module Ø 2.5 mm

1 connection

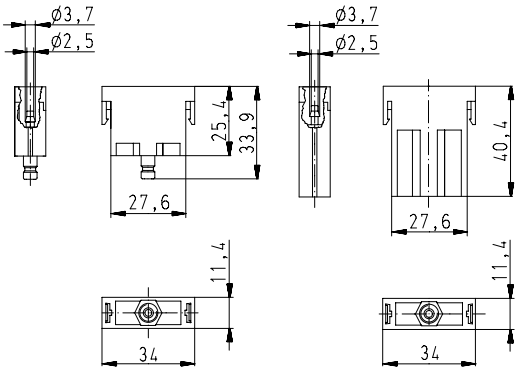

2 connections

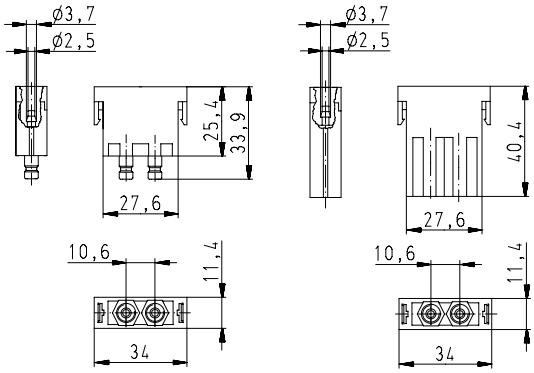

Pneumatic module Ø 4 mm

1 connection

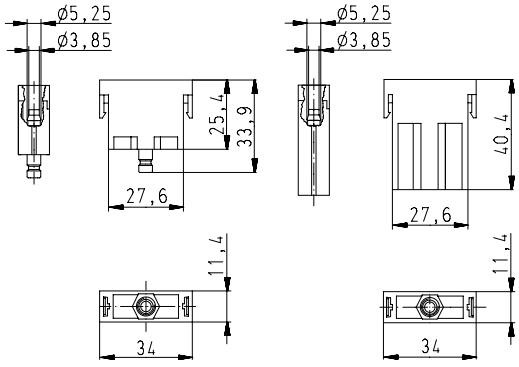

2 connections

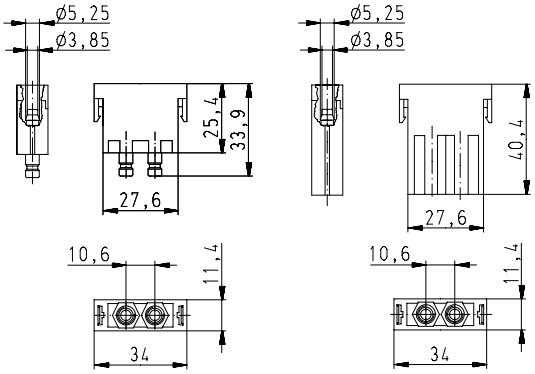

Modular connector system

Modular inserts *revos* FLEX

c UL us

High voltage module 2-pole

Description	Type	Part No.	P.U.
Modular inserts *revos* FLEX	**2-pole**		
Male insert	FLE SUC 2 5K	78.013.0253.0	5
Female insert	FLE BUC 5 5K	78.003.0253.0	5
Contacts	mm^2 / AWG, turned Ø 2.5 mm		
Male insert, Ag	0.5 / 20	05.544.3629.8	100
Female insert, Ag	0.5 / 20	02.125.3629.8	100
Male insert, Ag	0.75 – 1.0 / 18	05.544.3729.8	100
Female insert, Ag	0.75 – 1.0 / 18	02.125.3729.8	100
Male insert, Ag	1.5 / 16	05.544.3829.8	100
Female insert, Ag	1.5 / 16	02.125.3829.8	100
Male insert, Ag	2.5 / 14	05.544.3929.8	100
Female insert, Ag	2.5 / 14	02.125.3929.8	100
Male insert, Ag	4 / 12	05.544.4029.8	100
Female insert, Ag	4 / 12	02.125.4029.8	100

Technical data	
Rated voltage	2.8 kV / 5.5 kV at pollution degree 2
Rated voltage according to UL/CSA	-
Rated impulse voltage	18 kV
Rated current	20 A
Degree of pollution	3
Insulating material	Polyamid 6.6
Flammability class	UL 94 V-0
Temperature range	-40 … +120 °C

Description	Type	Part No.	P.U.
Accessories			
Crimping tool		95.101.0800.0	1
Crimping die	"B"	05.502.2100.0	1
Contact positioner	"1"	05.502.3100.0	1
Extraction tool		05.502.0810.0	1
Extraction tool for modular inserts		05.502.1010.0	1

Dimensions

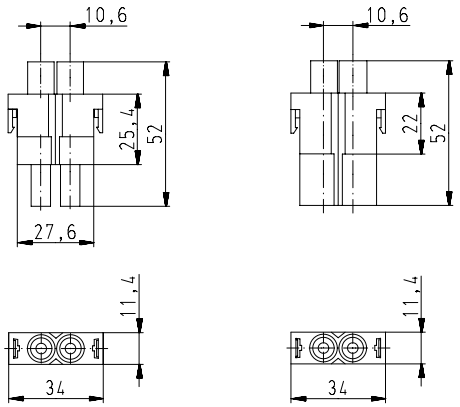

Modular connector system

Modular inserts *revos* FLEX

High current module 1-pole + ground

High current module 2-pole

Description	Type	Part No.	P.U.
Modular inserts *revos* FLEX	**1-pole + ground**		
Male insert	FLE STS 1P 25 1K AG	78.116.0153.0	5
Female insert	FLE BUS 1P 25 1K AG	78.106.0153.0	5
Modular inserts *revos* FLEX	**2-pole**		
Male insert	FLE STS 2 25 1K AG	78.116.0253.0	5
Female insert	FLE BUS 2 25 1K AG	78.106.0253.0	5

Technical data	
Rated voltage	1000 V
Rated voltage according to UL/CSA	600 V
Rated impulse voltage	8 kV
Rated current	82 A
Degree of pollution	3
Insulation strip length	15 mm
Rated cross section	
EN 60999	10 – 25 mm²
UL	8 – 4 AWG
CSA	8 – 4 AWG
Mating cycles	100
Contact resistance	≤ 2 mΩ
Surface	Ag
Insulating material	PA 6.6
Flammability	UL 94 V-0
Temperature range	-40 … +120 °C
Screws head design	Clamping screws M6
Recomm. torque	2.5 Nm slot

Dimensions

1-pole + ground

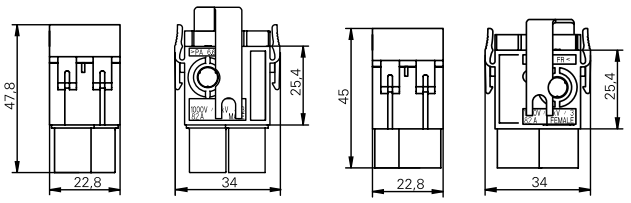

2-pole

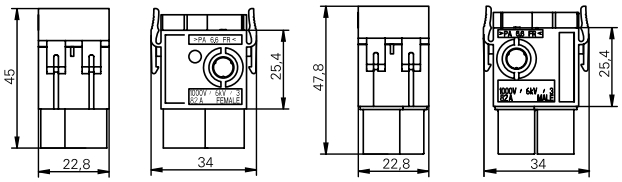

Derating curve

according to IEC 60512 sec. 3

revos FLEX

high voltage module 78.106/116.01/0253.0

1000 V / 82 A

- 10 mm²
- 16 mm²
- 25 mm²

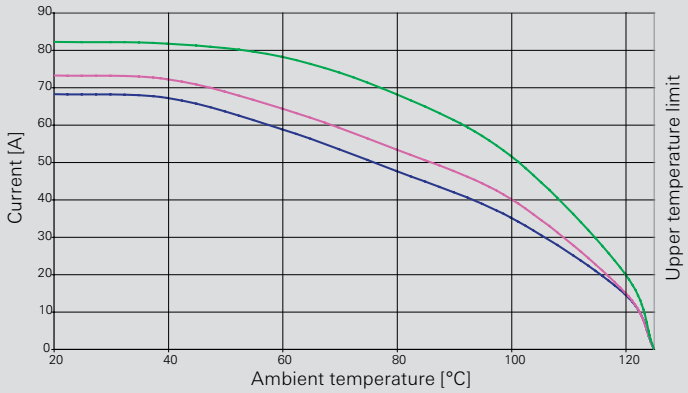

Modular connector system

Modular inserts
revos FLEX HC 1M

c UL us pending

High current module with crimp connection

Description	Type	Part No.	P.U.
Modular inserts revos FLEX			
Male insert	FLE STC 2 16 1	78.014.0253.0	10
Female insert	FLE BUC 2 16 1	78.004.0253.0	10
Contacts	mm² / AWG, turned Ø 3,6 mm		
Male insert, Ag	16 / 6	05.546.3021.8	20
Female insert, Ag	16 / 6	02.126.9721.8	20

Technical data	
Rated voltage (EN 60664-1)	1000 V
Rated voltage according to UL/CSA	600 V
Rated impulse voltage	8.0 kV
Degree of pollution	3
Overvoltage category	III
Rated current	65 A (UL 60 A, CSA 55 A)
Continuity resistor	< 1 mΩ
Insulation resistor	> 10^{12} Ω
Rated cross-section (EN 60999)	16 mm²
Rated cross-section (UL/CSA)	6 AWG
Material	
Insulating housing	PA
Colour	black
Flammability	UL 94 V-0
Contacts	
Contact surface	silver plated
Rated cross-section	16 mm²
Numbers of poles	2
Mating cycles	500
Temperature range	-40 °C … + 120 °C

Description	Part No.	Part No.
Accessoires	**Contacts**	**Fork cable lug**
Crimping tool	95.000.1000.0	95.101.0800.0
Crimping die for connection range 10 mm2	05.502.5300.0	
Fork cable lug for protective earth connection 10 mm²		06.600.6127.6
Fork cable lug for protective earth connection 16 mm²		06.600.6227.6
Crimping die for connection range 10 mm²		05.502.2800.0
Crimping die for connection range 16 mm²		05.502.2900.0
Extraction tool	05.502.0910.0	

Klauke type 60/22-L pneumatic crimping tool can also be used.

Dimensions

Male insert

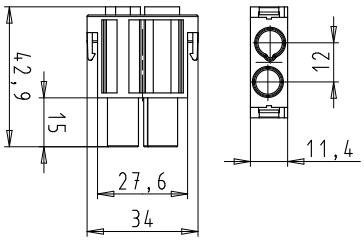

Female insert

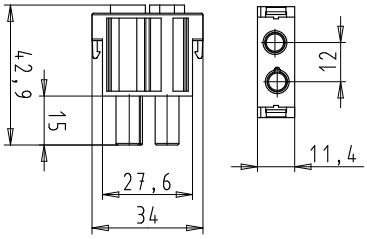

General requirements

- Due to reduced cross sections at PE contacts of frames, the PE contact has to be additionally protected against short circuits by using a protection circuit offering a sufficiently short breaking time (< 0,25 s).
- Parts to be used as connectors, not as plug devices (connector with breaking capcity). Do not mate under current or voltage!

Derating curve
according to IEC 60512-2 test 5b
revos FLEX
High current module 78.004/014.0253.0
1000 V

- 1 module
- 3 modules
- 7 modules

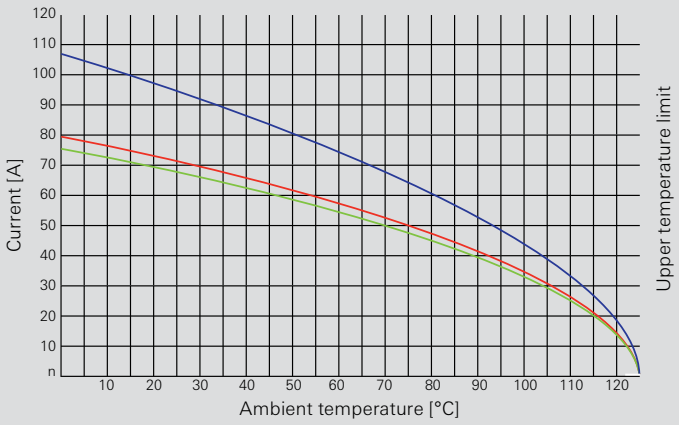

Modular connector system

Modular inserts
revos FLEX HC **2M**

c UL us **pending**

Description	Type	Part No.	P.U.
Modular inserts *revos* FLEX			
Male insert	FLE STC 2 35 1	78.016.0253.0	10
Female insert	FLE BUC 2 35 1	78.006.0253.0	10
Contacts	mm² / AWG, gedreht Ø 6 mm		
Male insert, Ag	16 / 6	05.546.2721.8	20
Female insert, Ag	16 / 6	02.126.7421.8	20
Male insert, Ag	25 / 4	05.546.2821.8	20
Female insert, Ag	25 / 4	02.126.7521.8	20
Male insert, Ag	35 / 2	05.546.2921.8	20
Female insert, Ag	35 / 2	02.126.7621.8	20

Technical data	
Rated voltage (EN 60664-1)	1000 V
Rated voltage according to UL/CSA	600 V
Rated impulse voltage	8.0 kV
Degree of pollution	3
Overvoltage category	III
Rated current (ϑ_{amb} = 40 °C) & 35 mm² Leiter	150 A (UL, CSA 120 A)
Continuity resistor	< 1 mΩ
Insulation resistor	> 10^8 Ω
Rated cross-section (EN 60999)	16-35 mm²
Rated cross-section (UL/CSA)	2 AWG
Material	
Insulating housing	PA
Colour	black
Flammability	UL 94 V-0
Contacts	
Contact surface	silver plated
Rated cross-section	16 / 25 / 35 mm²
Numbers of poles	2
Mating cycles	500
Temperature range	-40 °C … + 120 °C

Description	Type	Part No.	P.U.
Zubehör			
Crimping tool	95.000.1000.0	95.101.0800.0	
Crimping die for connection range 10 mm²		05.502.2800.0	
Crimping die for connection range 16 mm²	05.502.4600.0	05.502.2900.0	
Crimping die for connection range 25 mm²	05.502.4700.0		
Crimping die for connection range 35 mm²	05.502.4800.0		
Fork cable lug for protective earth connection 10mm²		06.600.6127.6	
Fork cable lug for protective earth connection 16mm²		06.600.6227.6	

Klauke type 60/22-L pneumatic crimping tool can also be used.

Dimensions

Male insert

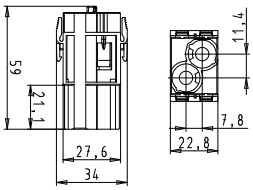

Female insert

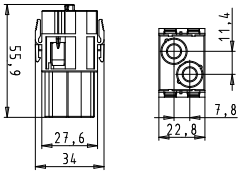

General requirements

- Due to reduced cross sections at PE contacts of frames, the PE contact has to be additionally protected against short circuits by using a protection circuit offering a sufficiently short breaking time (< 0,25 s).
- Parts to be used as connectors, not as plug devices (connector with breaking capcity). Do not mate under current or voltage!

Derating curve
according to IEC 60512 sec. 3

revos FLEX
High current module 78.006/016.0253.0
1000 V / 150 A

- 2-pole / 16 mm²
- 2-pole / 25 mm²
- 2-pole / 35 mm²
- 2 x 3-pole / 16 mm²
- 2 x 3-pole / 25 mm²
- 2 x 3-pole / 35 mm²

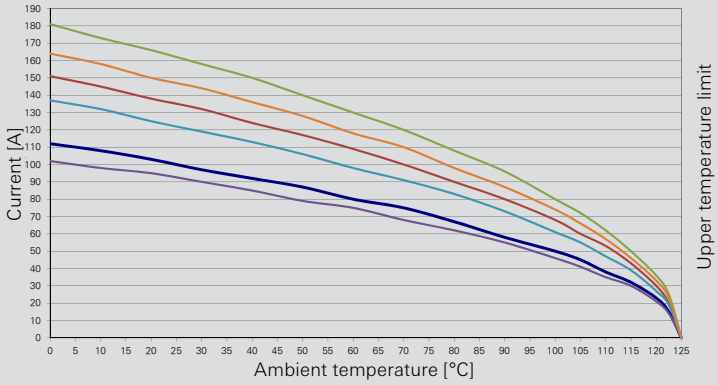

Modular connector system

Modular inserts *revos* FLEX

Spring clamp module 4-pole

Description	Type	Part No.	P.U.
Modular inserts *revos* FLEX	**4-pole**		
Male insert	FLE STF 4 2,5 40 AG	78.213.0453.0	10
Female insert	FLE BUS 4 2,5 40 AG	78.203.0453.0	10

Technical data	
Rated voltage	400 V
Rated voltage according to UL/CSA	600 V
Rated impulse voltage	6 kV
Rated current	14 A
Degree of pollution	3
Insulation strip length	10 mm
Rated cross section	
EN 60999	0.5 – 2.5 mm²
UL	20 – 12 AWG
CSA	20 – 12 AWG
Mating cycles	200
Contact resistance	≤ 5 mΩ
Surface	Ag
Mating cycles	100
Insulating material	Polycarbonate. halogen-free
Flammability	UL 94 V-0
Temperature range	-40 … +120 °C

Description	Type	Part No.	P.U.
Accessories			
Screwdriver blade	DIN 5264 A 0,6 x 3,5 mm	06.502.4000.0	5

Dimensions

Spring clamp module 4-pole

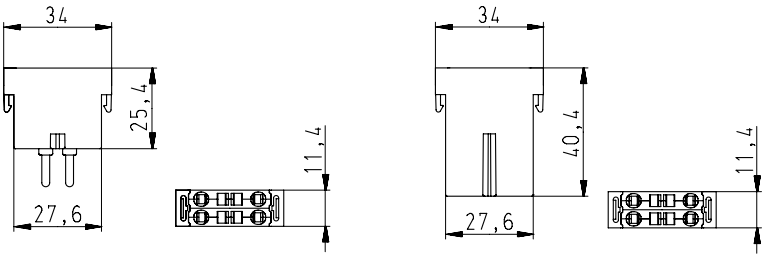

Derating curve

according to IEC 60512 sec. 3
revos FLEX 2 2

- 2.5 mm2 highest number of pole (28-contacts / Size 24)
- 2.5 mm2 highest number of pole (8-contacts / Size 6)
- 0.5 mm2 highest number of pole (28-contacts / Size 24)
- 0.5 mm2 highest number of pole (8-contacts / Size 6)

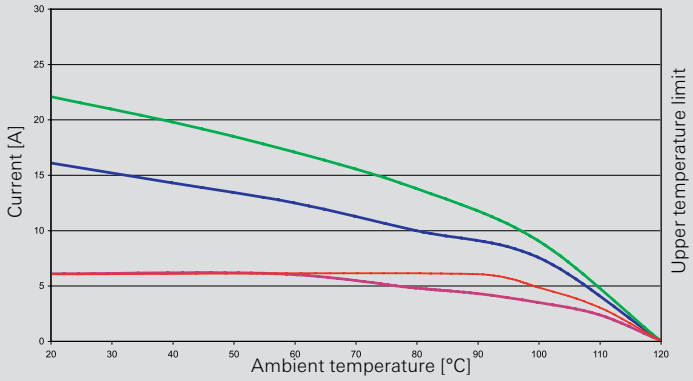

Modular connector system

Modular inserts ***revos*** FLEX

USB module

Profibus module

Description	Type	Part No.	P.U.
Modular inserts *revos* FLEX	**USB module**		
Male insert	FLE STK 4S 1,5 03 AU	78.111.0453.0	5
Female insert	FLE BUK 4S 1,5 03 AU	78.101.0453.0	5
Modular inserts *revos* FLEX	**Profibus module**		
Male insert	FLE STD 2S 1,5 03 AU	78.191.0453.0	5
Female insert	FLE BUD 2S 1,5 03 AU	78.181.0453.0	5

Technical data	
Rated voltage	30 V
Rated voltage according to UL/CSA	-
Conductor cross section	
USB module	0.8 – 1.5 mm²/ 28 – 16 AWG
Profibus module	according to PROFIBUS DP regulations
Rated current	1 A
Number of poles	
USB module	4+screen
Profibus module	2+screen
Connection torques screen / PCB connector	0.5 Nm / 0.2 Nm
Data transmission rate	
USB module	12 MBit/s
Profibus module	1.5 MBit/s
Insulating material	Polycarbonate
Flammability class of insulating housing	UL 94 V-0
Temperature range	-20 … +85 °C

Dimensions

USB module

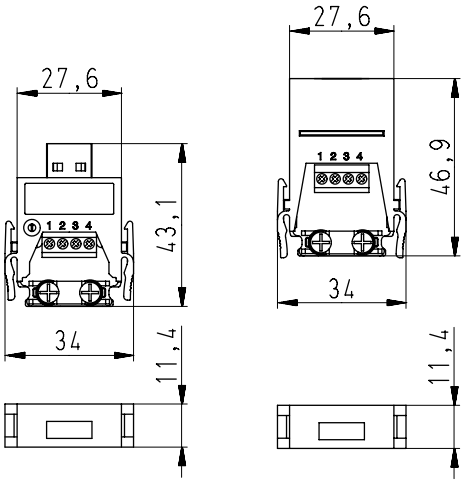

Profibus module

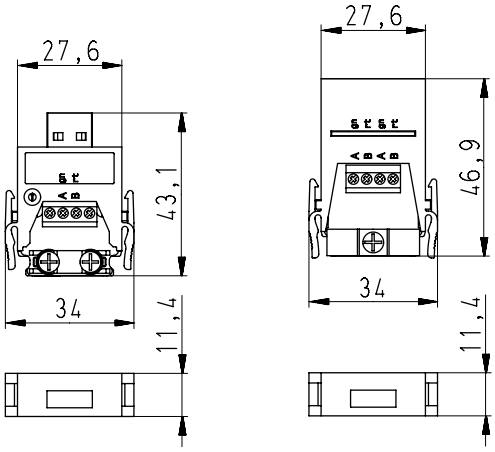

Modular connector system

Modular inserts *revos* FLEX

RJ45 module

Description	Type	Part No.	P.U.
Modular inserts *revos* FLEX	**RJ45 module**		
Male insert	FLE SRC 4 40	78.930.0453.0	5
Female insert	FLE BRC 4 40	78.920.0453.0	5
Contacts	mm² / AWG, turned Ø 1.6 mm		
Male insert	0.14 – 0.37 / 26 – 22	05.544.4129.8	100
Female insert	0.14 – 0.37 / 26 – 22	02.125.4129.8	100
Male insert	0.5 / 20	05.544.4229.8	100
Female insert	0.5 / 20	02.125.4229.8	100
Male insert	0.75 – 1.0 / 18	05.544.4329.8	100
Female insert	0.75 – 1.0 / 18	02.125.4329.8	100
Male insert	1.5 / 16	05.544.4429.8	100
Female insert	1.5 / 16	02.125.4429.8	100
Male insert	2.5 / 14	05.544.4529.8	100
Female insert	2.5 / 14	02.125.4529.8	100
Male insert, LWL POF	Ø 1.6 mm	05.544.8121.0	5
Female insert, LWL POF	Ø 1.6 mm	02.125.2421.0	5

Technical data	
Rated voltage	Data 30 V / power contacts 400 V
Transmission rate	according to Category 5, ≤ 100 MBit/s
Rated current	Data 1 A / power contacts 10 A
Degree of pollution	3
Insulating material	Polyamide 6.6
Flammability	UL 94 V-0
Temperature range	-20 … +80 °C

Description	Type	Part No.	P.U.
Accessories			
Crimping tool		95.101.0800.0	1
Crimping die	"B"	05.502.2100.0	1
Contact positioner	"1"	05.502.3100.0	1
Extraction tool		05.502.0710.0	1
Extraction tool for modular inserts		05.502.1010.0	1
Set of tools for optical fiber POF contacts		95.101.2000.0	1

Dimensions

RJ45 module

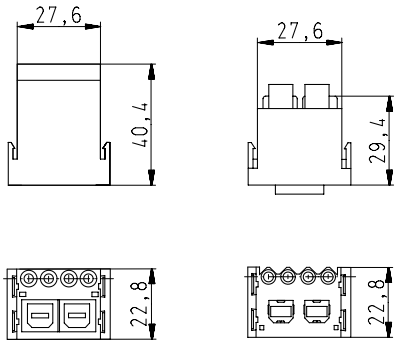

Modular connector system

Modular inserts *revos* FLEX TWIN BUS

Description	Type	Part No.	P.U.
Modular inserts *revos* FLEX			
Male insert	FLE STC 2 05	78.019.0253.0	1
Female insert	FLE BUC 2 05	78.009.0253.0	1
Contact holder male insert	FLE STKT 1 05	Z5.566.6056.0	1
Contact holder female insert	FLE BUKT 1 05	Z5.566.5956.0	1
Kontakte	mm² / AWG, gedreht Ø 1,6 mm		
Male insert, Ag	0,14 – 0,37 / 26 – 22	05.544.4129.8	100
Female insert, Ag	0,14 – 0,37 / 26 – 22	02.125.4129.8	100
Male insert, Ag	0,5 / 20	05.544.4229.8	100
Female insert, Ag	0,5 / 20	02.125.4229.8	100
Male insert, Ag	0,75 – 1,0 / 18	05.544.4329.8	100
Female insert, Ag	0,75 – 1,0 / 18	02.125.4329.8	100
Male insert, Ag	1,5 / 16	05.544.4429.8	100
Female insert, Ag	1,5 / 16	02.125.4429.8	100
Male insert, Ag	2,5 / 14	05.544.4529.8	100
Female insert, Ag	2,5 / 14	02.125.4529.8	100
Male insert, Au	0,14 – 0,37 / 26 – 22	05.544.4129.7	100
Female insert, Au	0,14 – 0,37 / 26 – 22	02.125.4129.7	100
Male insert, Au	0,5 / 20	05.544.4229.7	100
Female insert, Au	0,5 / 20	02.125.4229.7	100
Male insert, Au	0,75 – 1,0 / 18	05.544.4329.7	100
Female insert, Au	0,75 – 1,0 / 18	02.125.4329.7	100
Male insert, Au	1,5 / 16	05.544.4429.7	100
Female insert, Au	1,5 / 16	02.125.4429.7	100
Male insert, Au	2,5 / 14	05.544.4529.7	100
Female insert, Au	2,5 / 14	02.125.4529.7	100

Technical data	
Rated voltage	50V
Rated voltage according to UL/CSA	50 V AC/DC
Rated impulse voltage	0.8 kV
Rated current	10 A
Degree of pollution	3
Rated cross section	
EN 60999	0.5 – 2.5 mm²
UL	see table below
CSA	see table below
Number of contacts	1
Shielding	Shielding positioned over the cable clamp on the contact carrier
External diameter of the sheathed cable	3 – 6 mm / 6 – 9.5 mm
Insulating material	PC
Flammability class of insulating housing	UL 94 V-0
Kontakte	
Material	Copper alloy
Surface	Ag, Au
Contact resistance	< 4 mΩ
Temperature range	-40 … +70 °C

Description	Type	Part No.	P.U.
Accessories			
Crimping tool		95.101.0800.0	1
Crimping die	"B"	05.502.2100.0	1
Contact positioner	"1"	05.502.3100.0	1
Extraction tool		05.502.0710.0	1

Wire cross section	Rated current	
	UL	CSA
16 AWG, stranded, Cu	20.5 A	11 A
18 AWG, stranded, Cu	18 A	9.5 A
20 AWG, stranded, Cu	14 A	7.5 A
22 AWG, stranded, Cu	12 A	6 A
24 AWG, stranded, Cu	8.5 A	4.5 A
26 AWG, stranded, Cu	7 A	3.5 A

Dimensions

Male insert

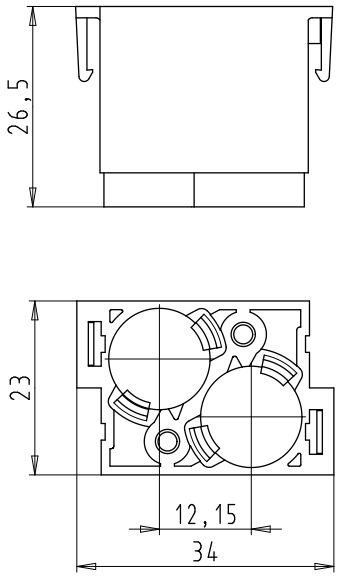

Female insert

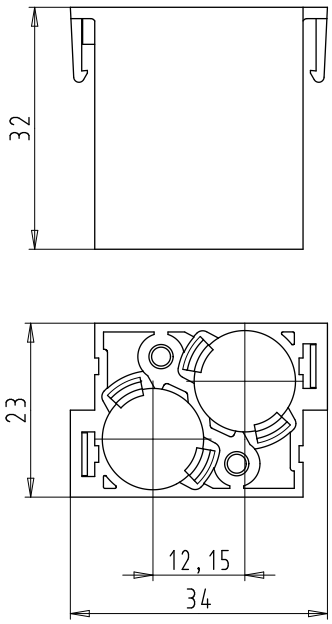

Contact holder male insert

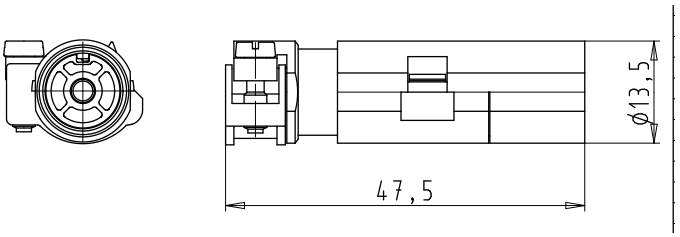

Contact holder female insert

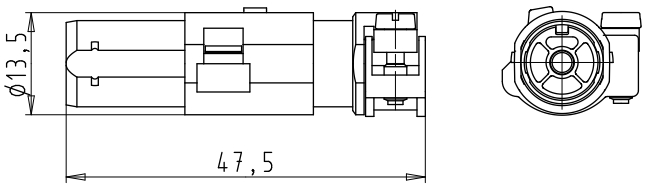

Insulation strip length

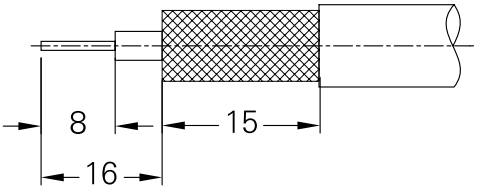

Modular connector system

Module frame *revos* FLEX

Figures:
2-Slots and 7-Slots
Male / Female

Description	Type	Part No.	P.U.
Module frame *revos* FLEX	**2-Slots, Size 6**		
gray RAL 7032			
Male	FLE MRS 6	78.010.0653.0	10
Female	FLE MRB 6	78.000.0653.0	10
Module frame *revos* FLEX	**3-Slots, Size 10**		
gray RAL 7032			
Male	FLE MRS 10	78.010.1053.0	10
Female	FLE MRB 10	78.000.1053.0	10
Module frame *revos* FLEX	**5-Slots, Size 16**		
gray RAL 7032			
Male	FLE MRS 16	78.010.1653.0	10
Female	FLE MRB 16	78.000.1653.0	10
Module frame *revos* FLEX	**7-Slots, Size 24**		
gray RAL 7032			
Male	FLE MRS 24	78.010.2453.0	10
Female	FLE MRB 24	78.000.2453.0	10

Technical data	
Insulating material	Polycarbonate, halogen-free
Flammability class	UL 94 V-0
Temperature range	-40 … +120 °C

Housing *revos* BASIC / *revos* BASIC M	Type	Page
Size	6/6H	118–125, 190–191, 194, 196
Size	10/10H	126–143, 190-192, 198, 200
Size	16/16H	144–163, 190-191, 202, 204
Size	24/24H	164–183, 190-191, 206, 208

Dimensions

2-Slots

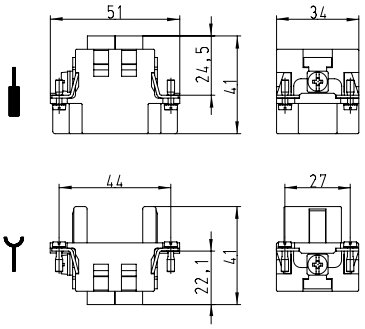

3-Slots

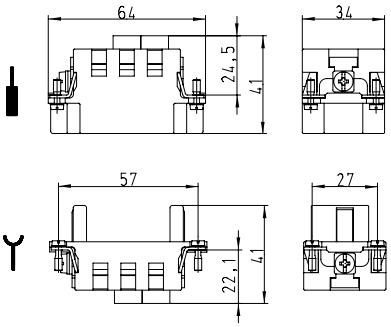

5-Slots

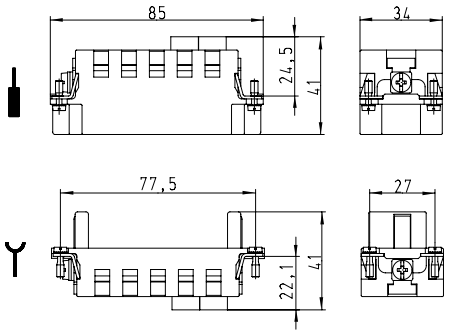

7-Slots

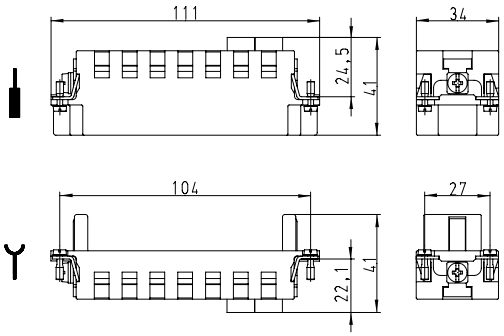

Modular connector system – Extraction tool

Extraction tool

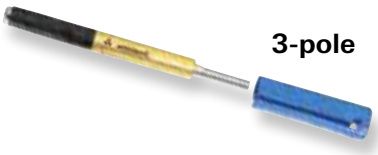

3-pole

4-pole

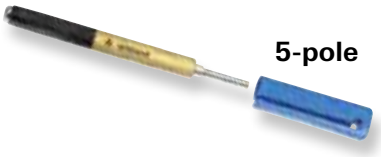

5-pole

10-pole

20-pole

for modular inserts

Description	Type	Part No.	P.U.
Accessories			
Extraction tool	MOD. 3POL	05.502.0910.0	1
Extraction tool	MOD. 4POL	05.502.0610.0	1
Extraction tool	MOD. 5POL	05.502.0810.0	1
Extraction tool	MOD. 10POL	05.502.0710.0	1
Extraction tool	MOD. 20POL	05.502.0410.0	1
Extraction tool for modular inserts		05.502.1010.0	1

Module Carrier and Upper Shell

Module Carrier and Upper Shell *revos* FLEX COMPACT 1M

Module Carrier

with locking lever
without locking lever

Upper Shell Lateral cable entry

Upper Shell Top cable entry

Description	Type	M	Part No.	P.U.
Module Carrier				
with locking lever	RFC MC L 1 M A20		78.320.0134.0	1
without locking lever	RFC MC 1 M A20		78.330.0134.0	1
Upper Shell				
Lateral cable entry M20				
with threaded collar	RFC TS 1M M20S A21	20	78.352.0134.1	1
with cable gland, IP68, ➞|Ø|⇜ 8 – 13 mm	RFC TS 1M M20S A25	20	78.352.0134.5	1
Lateral cable entry M25				
with threaded collar	RFC TS 1M M25S A21	25	78.353.0134.1	1
with cable gland, IP68, ➞|Ø|⇜ 11 – 18 mm	RFC TS 1M M25S A25	25	78.353.0134.5	1
Top cable entry M20				
with threaded collar	RFC TS 1M M20T A21	20	78.362.0134.1	1
with cable gland, IP68, ➞|Ø|⇜ 8 – 13 mm	RFC TS 1M M20T A25	20	78.362.0134.5	1
Top cable entry M25				
with threaded collar	RFC TS 1M M20T A21	25	78.363.0134.1	1
with cable gland, IP68, ➞|Ø|⇜ 11 – 18 mm	RFC TS 1M M20T A25	25	78.363.0134.5	1

Technical data	
Material	aluminum
Surface	-
Locking levers	stainless steel
Gasket	NBR
PE connection	0.34 – 10 mm²
Corrosion protection	1440 hrs (ISO 9227)
Mating cycles	500 (EN 61984)
Vibration	Class B – Category 1 (DIN EN 50155)
Degree of protection	
with appropriate cable glands	IP65 & IP68 (3 m / 10 hrs) & IP69k (DIN EN 60529)
Temperature range	-40 °C – +120 °C
EMC	
EMC coupling resistance acc. to IEC60603-7-3	< 10 mOhm DC to 10 MHz
EMC shielding attenuation	> 70dB 10 MHz to 100 MHz
Expanded measuring span (in connection with suitable EMC cable screw gland)	
Approval	
NEMA-Degree of protection	UL Type 4x
Applicable modules	all modules with module width 1

Description	Type	M	Part No.	P.U.
Accessories				
Cable gland IP68, nickel-plated brass	Connection range 8 – 13mm	20	Z5.507.1321.0	10
Cable gland IP68, nickel-plated brass	Connection range 11 – 18mm	25	Z5.507.1521.0	10
Cable gland IP68 EMC, nickel-plated brass	Connection range 7.5 – 14 mm	20	Z5.503.7221.0	10
Cable gland IP68 EMC, nickel-plated brass	Connection range 10 – 18 mm	25	Z5.503.7321.0	10
Cable gland IP69k nickel-plated brass	Connection range 6 – 12 mm	20	Z5.505.7121.0	10
Cable gland IP69k nickel-plated brass	Connection range 11 – 17 mm	25	Z5.505.7221.0	10

A combination for a control cabinet feed-through consists of one upper shell, one module carrier with locking lever and one without locking lever.

A combination for a cable-to-cable connection consists of two upper hells, one module carrier with locking lever and one without locking lever.

Dimensions

Module Carrier

with locking lever

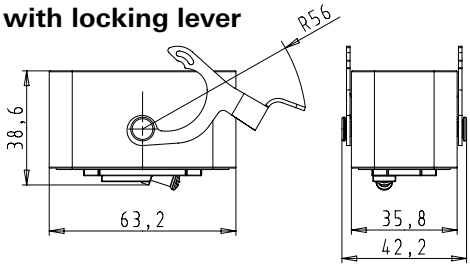

without locking lever

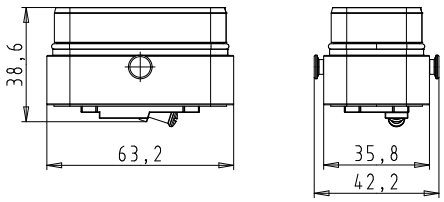

Upper Shell Lateral cable entry

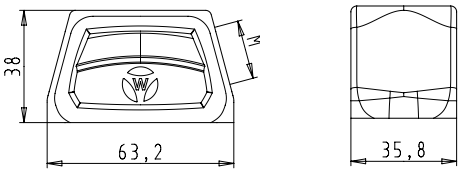

Upper Shell Top cable entry

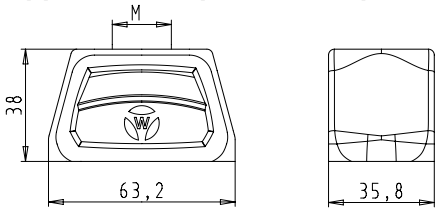

Derating curve

Derating curve according to IEC 60512 sec. 3

78.003/013.0253.0 ***revos***FLEX 2-pole / ***revos***FLEX COMPACT 1 M

Contact Ø 2.5 mm turned, 2.5 mm², 2-pole

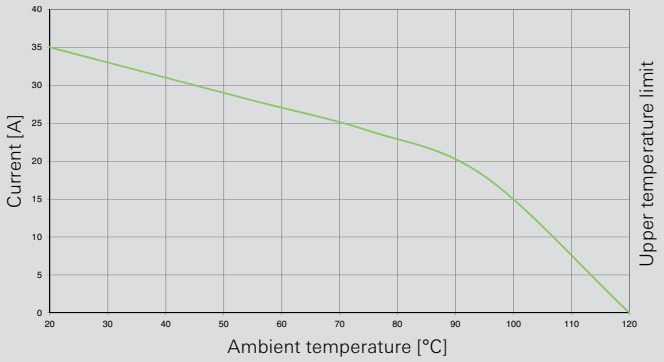

Derating curve according to IEC 60512 sec. 3

78.004/014.0353.0 ***revos***FLEX 3-pole / ***revos***FLEX COMPACT 1 M

Contact Ø 3.6 mm turned, 6.0 mm², 3-pole

Contact Ø 3.6 mm turned, 10 mm², 3-pole

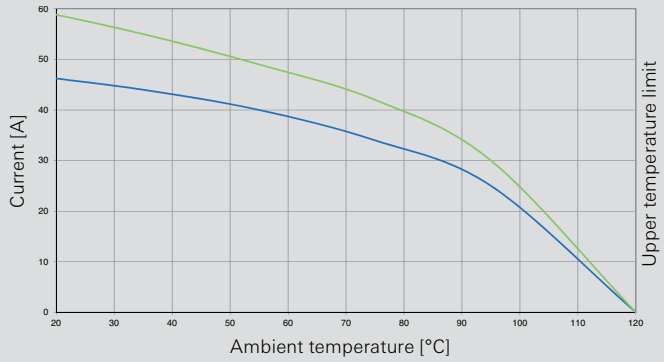

Derating curve according to IEC 60512 sec. 3

78.003/013.0453.0 ***revos***FLEX 4-pole / ***revos***FLEX COMPACT 1 M

Contact Ø 2.5 mm stamped, 1.5 mm², 4-pole

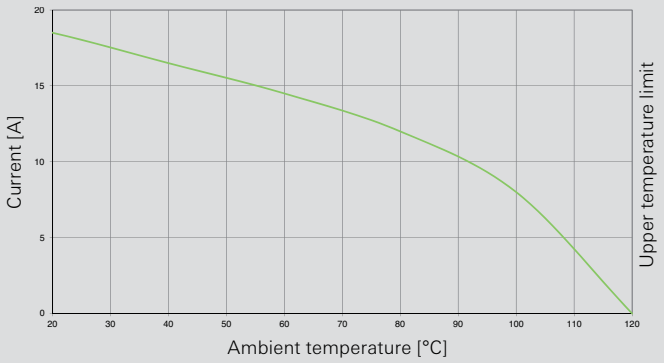

Derating curve according to IEC 60512 sec. 3

78.003/013.0553.0 ***revos***FLEX 5-pole / ***revos***FLEX COMPACT 1 M

Contact Ø 2.5 mm turned, 1.0 mm², 5-pole

Contact Ø 2.5 mm turned, 2.5 mm², 5-pole

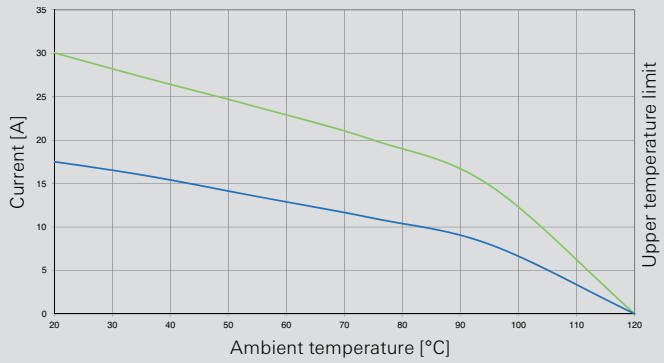

Derating curve according to IEC 60512 sec. 3

78.002/012.1053.0 ***revos***FLEX 10-pole / ***revos***FLEX COMPACT 1 M

Contact Ø 1.6 mm turned, 1.0 mm², 10-pole

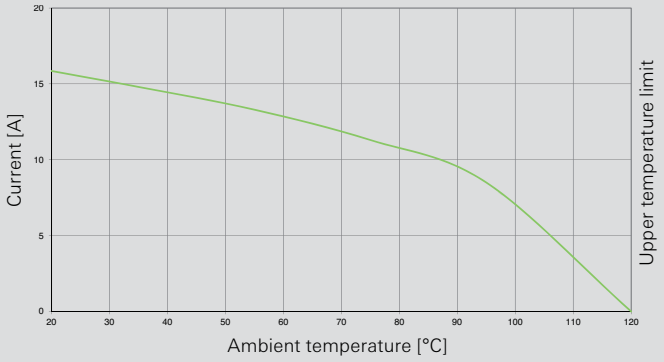

Derating curve according to IEC 60512 sec. 3

revosFLEX Spring clamp module 78.203/213.0453.0 / ***revos***FLEX COMPACT 1 M

Ø 1.0 mm², 4-pole

Ø 2.5 mm², 4-pole

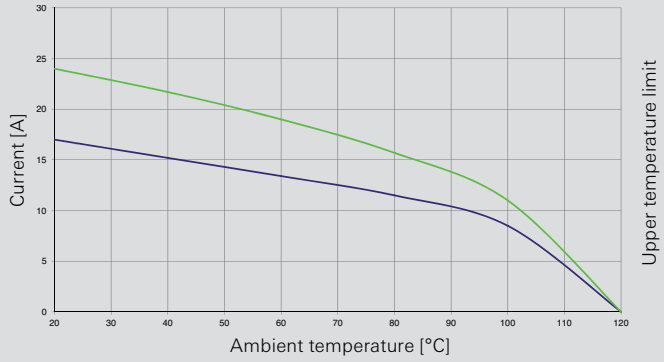

690 V Plastic connector

Plastic connector ***revos*** MOT

10-pole + ground

Open-bottom base

Description	Type	Part No.	P.U.
Plastic connector *revos* MOT			
Hood, side cable entry	**10-pole + ground**		
with M25 gland ⇥IØI⇤ 7 – 16 mm	MOT GOT 2 W25 SW P0	75.013.0051.0	10
with threaded bore hole M25	MOT GOT 2 W25 SW P2	75.013.0051.2	10
Bases			
open	MOT GUT 2 O SW P	75.013.5051.0	10

Technical data	
Insulating material	Polyamide
Flammability class	UL 94 V-0
Degree of protection	IP65
Color	black RAL 9005
Temperature range	-40 … +80 °C

Description	Type	Part No.	P.U.
Accessories			
Cable gland, M25 x 1.5, Plastic material, black	Connection range 9 – 16 mm	Z5.507.1453.1	10
Cable gland, M25 x 1.5, Plastic material, black	Connection range 13 – 18 mm	Z5.507.1553.1	10

Dimensions

Hood 10-pole + ground

side cable entry

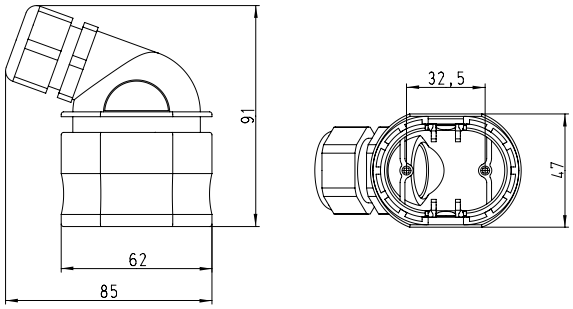

Bases 10-pole + ground

open

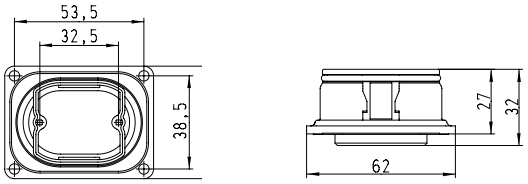

690 V contact inserts

Contact inserts
revos MOT

10-pole + ground

Description	Type	Part No.	P.U.
Contact inserts *revos* MOT	**10-pole + ground**		
Male insert	MOT STC 2 10 69	75.012.5053.0	10
Female insert	MOT BUC 2 10 69	75.012.0053.0	10
Contacts	mm² / AWG		
Male insert	0.5 / 20	05.543.70xx.0	200
Female insert	0.5 / 20	02.123.70xx.0	200
Male insert	0.75 – 1 / 18	05.543.71xx.0	200
Female insert	0.75 – 1 / 18	02.123.71xx.0	200
Male insert	1.5 / 16	05.543.72xx.0	200
Female insert	1.5 / 16	02.123.72xx.0	200
Male insert	2.5 / 14	05.543.73xx.0	200
Female insert	2.5 / 14	02.123.73xx.0	200
Male insert	4 / 12	05.543.74xx.0	200
Female insert	4 / 12	02.123.74xx.0	200
Surface:	tin-plated xx = 21 / silver-plated xx = 02 / gold-plated xx = 01		
Example:	Female insert, silver-plated, 1.5 mm² / Part No. 02.123.7202.0		

Technical data	
Rated voltage	690 V
Rated voltage according to UL/CSA	600 V
Rated impulse voltage	8 kV
Rated current	16 A
Degree of pollution	3
Insulating material	Polyamid
Flammability class	UL 94 V-0
Color	gray RAL 7035
Temperature range	-40 … +80 °C

Description	Type	Part No.	P.U.
Accessories			
Crimping tool		95.101.0800.0	1
Crimping die	"B"	05.502.2100.0	1
Contact positioner	"3"	05.502.3300.0	1
Extraction tool		05.502.3500.0	1

Dimensions

Contact inserts 10-pole + ground

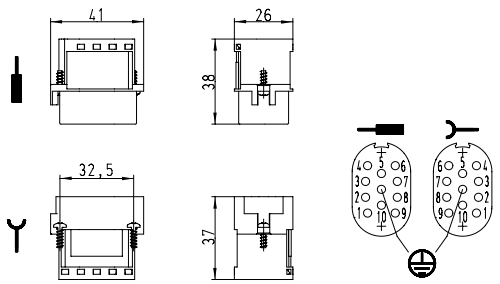

revos housing components – simply, safely protected

The ***revos*** housing components for heavy duty connectors consist of high-quality aluminum and zinc die casting. Wieland has designed the housings to be corrosion-resistant, water and dust tight, and usable under the toughest environmental conditions.

Hoods

Hoods

Metal housings for ***revos*** MINI

Lateral cable entry

Top cable entry

for cable-to-cable couplings

Plastic housings for ***revos*** MINI

Lateral cable entry

Top cable entry

for cable-to-cable couplings

Description	Type	M	Part No.	P.U.
Hoods	**Metal housings for *revos* MINI**			
Lateral cable entry M20				
with cable gland, IP54, ➞IØ⇜ 3 – 14.5 mm	MIN GOT GA 7 M20 25 Z0	20	76.350.0736.0	10
with threaded collar	MIN GOT GA 7 M20 25 Z1	20	76.350.0736.1	10
Top cable entry M20				
with cable gland, IP54, ➞IØ⇜ 3 – 14.5 mm	MIN GOT GB 7 M20 25 Z0	20	76.352.0736.0	10
with threaded collar	MIN GOT GB 7 M20 25 Z1	20	76.352.0736.1	10
for cable-to-cable couplings M20				
with cable gland, IP54, ➞IØ⇜ 3 – 14.5 mm	MIN GOT GC 7 M20 25 Z0	20	76.372.0736.0	10
with threaded collar	MIN GOT GC 7 M20 25 Z1	20	76.372.0736.1	10
Hoods, increased height design				
Top cable entry M20				
with cable gland, IP54, ➞IØ⇜ 3 – 14.5 mm	MIN GOT GB7H M20 25 Z0	20	76.362.0736.0	1
with threaded collar	MIN GOT GB7H M20 25 Z1	20	76.362.0736.1	1
with cable gland, IP68, ➞IØ⇜ 6 – 12 mm	MIN GOT GB7H M20 25 Z5	20	76.362.0736.5	1
Hoods	**Plastic housings for *revos* MINI**			
Lateral cable entry M20				
with threaded collar	MIN GOT GA 7 M20 25 P1	20	76.350.0760.1	10
with cable gland, IP68, ➞IØ⇜ 6 – 12 mm	MIN GOT GA 7 M20 25 P5	20	76.350.0760.5	10
Top cable entry M20				
with cable gland, IP54, ➞IØ⇜ 3 – 14.5 mm	MIN GOT GB 7 M20 25 P0	20	76.352.0760.0	10
with threaded collar	MIN GOT GB 7 M20 25 P1	20	76.352.0760.1	10
with cable gland, IP68	MIN GOT GB 7 M20 25 P5	20	76.352.0760.5	10
for cable-to-cable couplings M20				
with threaded collar	MIN GOT GC 7 M20 25 P1	20	76.372.0760.1	10
with cable gland, IP68, ➞IØ⇜ 6 – 12 mm	MIN GOT GC 7 M20 25 P5	20	76.372.0760.5	10

Technical data		
Material	metal	plastic
	Die cast zinc alloy	Polyamide
Surface	silicon-free	
Locking levers	zinc-plated steel	
Gasket	NBR	
Degree of protection		
with latched locking levers	IP54	
with appropriate cable glands	IP65	
Temperature range	-40 … +120 °C	

Description	Type	Part No.	P.U.
Accessories			
Cover without gasket for male insert			
Metal, nickel-plated	MIN AD DA 7 Z	07.417.6729.0	10
Plastic material, gray	MIN AD DA 7 P	07.417.6753.0	10
Cover with gasket for female insert			
Metal, nickel-plated	MIN AD DB 7 Z	07.417.6829.0	10
Plastic material, gray	MIN AD DB 7 P	07.417.6853.0	10
Contact inserts		Page 28–31	

Dimensions

Hoods

Lateral cable entry

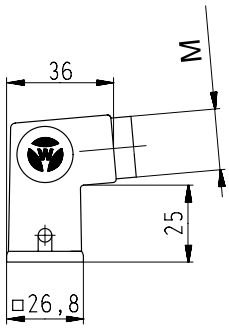

Top cable entry

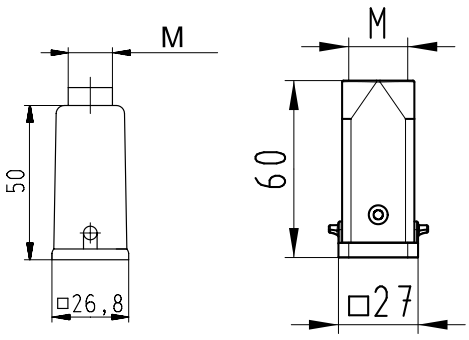

for cable-to-cable couplings

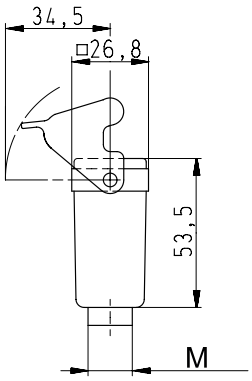

Bases

Bases

Metal housings for *revos* MINI

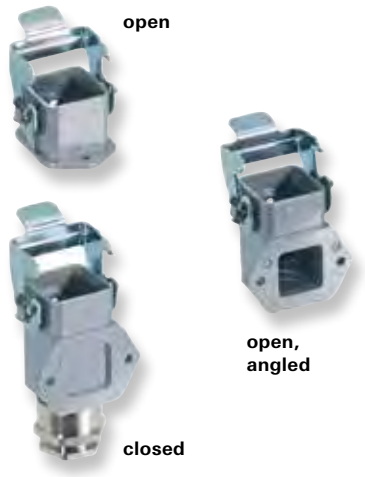

Description	Type	M	Part No.	P.U.
Bases	**Metal housings for *revos* MINI**			
open	MIN GUT GA 7 25 Z	-	76.320.0729.0	10
open, angled	MIN GUT GB 7 25 Z	-	76.321.0729.0	10
closed M20				
with cable gland, IP54, ⇸|Ø|⇷ 3 – 14.5 mm	MIN GUT GC 7 M20 25 Z0	20	76.322.0736.0	10
with threaded collar	MIN GUT GC 7 M20 25 Z1	20	76.322.0736.1	10
Bases	**Plastic housings for *revos* MINI**			
open	MIN GUT GA 7 25 P	-	76.320.0753.0	10
open, angled	MIN GUT GB 7 25 P	-	76.321.0753.0	10
closed M20				
with cable gland, IP68, ⇸|Ø|⇷ 6 – 12 mm	MIN GUT GC 7 M20 25 P5	20	76.322.0760.5	10

Technical data		
Material	metal	plastic
	Die cast zinc alloy	Polyamide
Surface	silicon-free	
Locking levers	zinc-plated steel	
Gasket	NBR	
Degree of protection		
with latched locking levers	IP54	
with appropriate cable glands	IP65	
Temperature range	-40 … +120 °C	

Plastic housings for *revos* MINI

Description	Type	Part No.	P.U.
Accessories			
Cover without gasket for male insert			
Metal, nickel-plated	MIN AD DA 7 Z	07.417.6729.0	10
Plastic material, gray	MIN AD DA 7 P	07.417.6753.0	10
Cover with gasket for female insert			
Metal, nickel-plated	MIN AD DB 7 Z	07.417.6829.0	10
Plastic material, gray	MIN AD DB 7 P	07.417.6853.0	10
Contact inserts		Page 28–31	

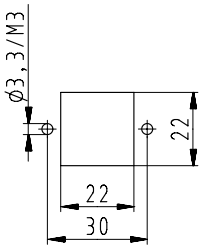

Drilling Template

Dimensions

Bases

open

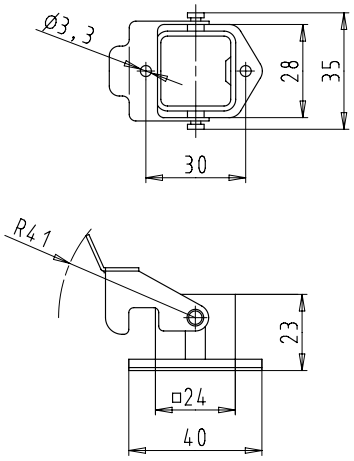

open, angled

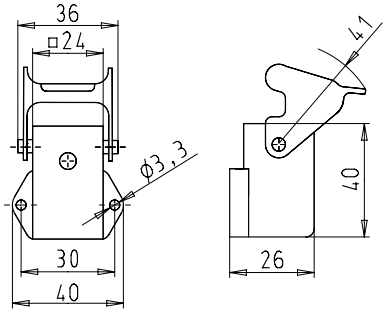

closed

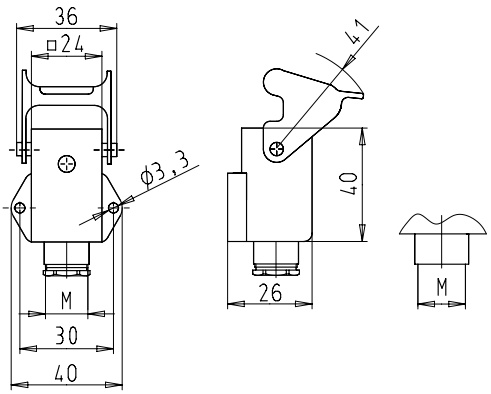

Hoods

Hoods
Metal housings for *revos* MINI
Screw lock

Top cable entry

Description	Type	M	Part No.	P.U.
Hoods	**Aluminum housing**			
Top cable entry M20				
with threaded collar	MIN GOM GD 7 M20 Z1	20	76.452.0736.1	5
Top cable entry M25				
with threaded collar	MIN GOM GD 7 M25 Z1	25	76.454.0736.1	5

Technical data	
Material	Die cast aluminum alloy
Surface	silicon-free
Locking levers at Multipole connectors	Screw plug
Gasket at Multipole connectors	NBR
Degree of protection	
with appropriate cable glands	IP69k
Temperature range	-40 … +120 °C

Description	Type	M	Part No.	P.U.
Accessories				
Cable gland IP68, nickel-plated brass	Connection range 8 – 13 mm	20	Z5.507.1321.0	10
Cable gland IP68, nickel-plated brass	Connection range 11 – 18 mm	25	Z5.507.1521.0	10
Cable gland IP69k, nickel-plated brass	Connection range 6 – 12 mm	20	Z5.505.7121.0	10
Cable gland IP69k, nickel-plated brass	Connection range 11 – 17 mm	25	Z5.505.7221.0	10

Dimensions

Hoods

Top cable entry M20

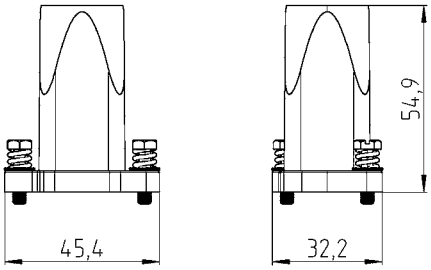

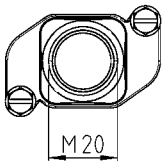

Top cable entry M25

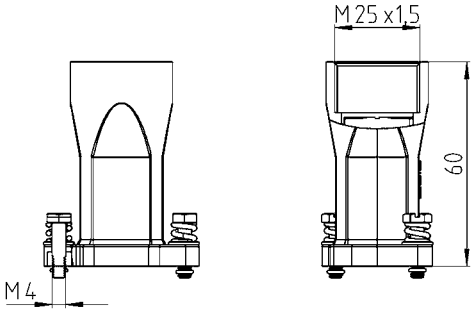

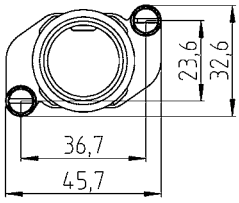

Bases

Bases

Metal housings for *revos* MINI
Screw lock

open

Straight cable entry

Cover

Cover with thether cord and loop

Description	Type	M	Part No.	P.U.
Bases	**Aluminum housing**			
open	MIN GUM GD 7 Z	-	76.420.0736.0	5
straight cable entry, with closed bottom	MIN GUM GF 7 M20 Z1	20	76.422.0736.1	5

Technical data	
Material	Die cast aluminum alloy
Surface	silicon-free
Locking levers at Multipole connectors	Screw plug
Gasket at Multipole connectors	NBR
Degree of protection	
with appropriate cable glands	IP69k
Temperature range	-40 … +120 °C

Description	Type	M	Part No.	P.U.
Accessories				
Cover for housing bases	MIN AD DC Z	-	Z7.432.6136.0	5
Cover for housing bases with thether cord and loop	MIN AD DC FS Z	-	Z7.432.6236.0	5

Dimensions

Bases

open

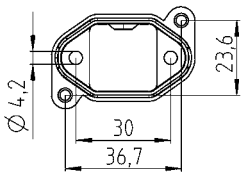

Drilling Template

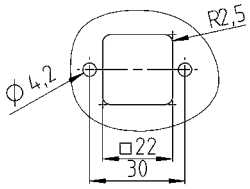

open, angled

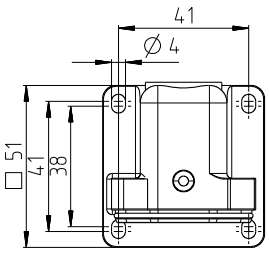

Drilling Template

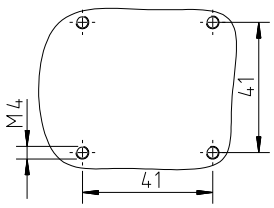

Accessories

Cover

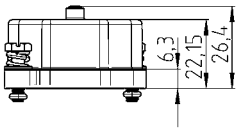

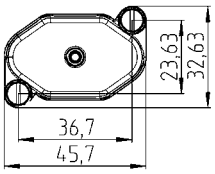

Cover with thether cord and loop

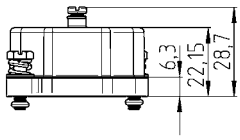

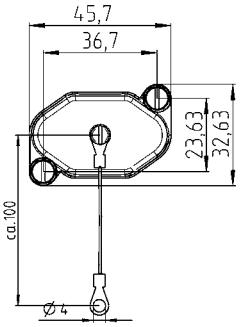

Hoods, single locking lever
Size 6

Hoods
Size 6

Lateral cable entry

Top cable entry

Multipole connectors for cable-to-cable couplings

Description	Type	M	Part No.	P.U.
Hoods, size 6	**Aluminum housing**			
Lateral cable entry M20				
with cable gland, IP54, ➞IØI⇜ 3 – 14.5 mm	BAS GOT GG 6 M20 A0	20	70.350.0635.0	1
with threaded collar	BAS GOT GG 6 M20 A1	20	70.350.0635.1	1
Lateral cable entry M25				
with cable gland, IP54, ➞IØI⇜ 7.5 – 19 mm	BAS GOT GG 6 M25 A0	25	70.353.0635.0	1
with threaded collar	BAS GOT GG 6 M25 A1	25	70.353.0635.1	1
Top cable entry M20				
with cable gland, IP54, ➞IØI⇜ 3 – 14.5 mm	BAS GOT GI 6 M20 A0	20	70.352.0635.0	1
with threaded collar	BAS GOT GI 6 M20 A1	20	70.352.0635.1	1
Top cable entry M25				
with cable gland, IP54, ➞IØI⇜ 7.5 – 19 mm	BAS GOT GI 6 M25 A0	25	70.354.0635.0	1
with threaded collar	BAS GOT GI 6 M25 A1	25	70.354.0635.1	1
Multipole connectors for cable-to-cable couplings M20				
with cable gland, IP54, ➞IØI⇜ 3 – 14.5 mm	BAS GOT GI 6 M20 A0	20	70.352.0635.0	1
with cable gland, IP54, ➞IØI⇜ 3 – 14.5 mm Locking levers and gasket	BAS GOT GL 6 M20 A0	20	70.372.0635.0	1
with threaded collar	BAS GOT GI 6 M20 A1	20	70.352.0635.1	1
with threaded collar Locking levers and gasket	BAS GOT GL 6 M20 A1	20	70.372.0635.1	1

Technical data	
Material	Die cast aluminum alloy
Surface	silicon-free/–
Locking levers at Multipole connectors	Handle: Polyamide, UL94-V0; stainless steel: V2A
Gasket at Multipole connectors	NBR
Degree of protection	
with latched locking levers	IP54
with appropriate cable glands	IP65
Temperature range	-40 … +120 °C

Description	Type	M	Part No.	P.U.
Accessories				
Cable gland IP68, plastic material, gray	Connection range 6 – 12 mm	20	Z5.507.1353.0	10
Cable gland IP68, nickel-plated brass	Connection range 8 – 13 mm	20	Z5.507.1321.0	10
Cable gland IP68, plastic material, gray	Connection range 7 – 16 mm	25	Z5.507.1553.0	10
Cable gland IP68, nickel-plated brass	Connection range 11 – 18 mm	25	Z5.507.1521.0	10
Strain relief IP54, nickel-plated brass	Connection range 9 – 13.5 mm	20	Z5.507.9621.0	10
Strain relief IP54, nickel-plated brass	Connection range 14 – 20 mm	25	Z5.507.9721.0	10
Contact inserts				
Size 6 see the product matrix			Page 24–25	

Dimensions

Hoods

Lateral cable entry

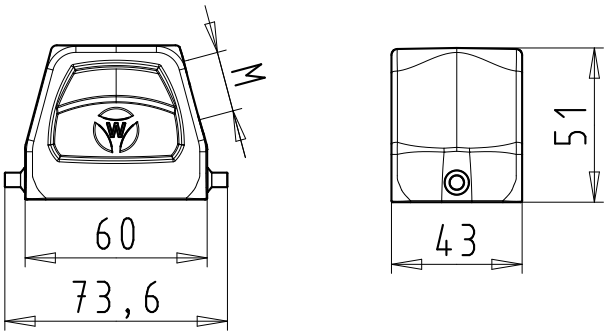

Top cable entry

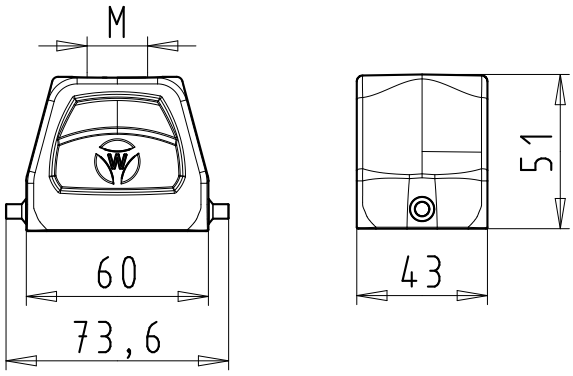

Multipole connectors for cable-to-cable couplings

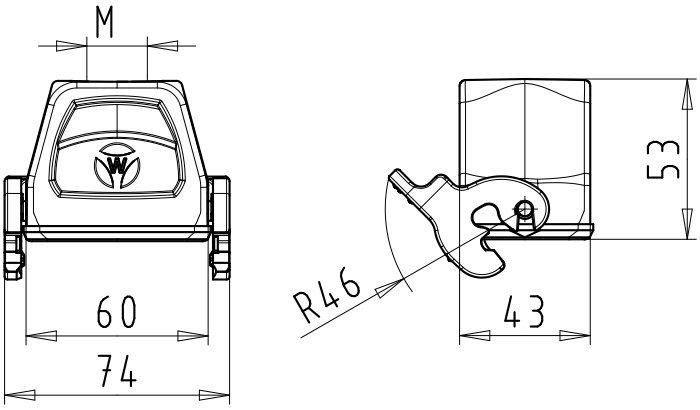

Hoods, single locking lever
Size 6H, increased height design

Hoods, Size 6H, increased height design

Lateral cable entry

Top cable entry

Description	Type	M	Part No.	P.U.
Hoods, size 6H	**Aluminum housing**			
Lateral cable entry M25				
with cable gland, IP54, →|Ø|← 7.5 – 19 mm	BAS GOT GG 6H M25 A0	25	73.350.0635.0	1
with threaded collar	BAS GOT GG 6H M25 A1	25	73.350.0635.1	1
Lateral cable entry M32				
with cable gland, IP54, →|Ø|← 15 – 26.5 mm	BAS GOT GG 6H M32 A0	32	73.353.0635.0	1
with threaded collar	BAS GOT GG 6H M32 A1	32	73.353.0635.1	1
Top cable entry M25				
with cable gland, IP54, →|Ø|← 7.5 – 19 mm	BAS GOT GI 6H M25 A0	25	73.352.0635.0	1
with threaded collar	BAS GOT GI 6H M25 A1	25	73.352.0635.1	1
Top cable entry M32				
with cable gland, IP54, →|Ø|← 15 – 26.5 mm	BAS GOT GI 6H M32 A0	32	73.354.0635.0	1
with threaded collar	BAS GOT GI 6H M32 A1	32	73.354.0635.1	1

Technical data	
Material	Die cast aluminum alloy
Surface	silicon-free
Locking levers	–
Gasket	–
Degree of protection	
with latched locking levers	IP54
with appropriate cable glands	IP65
Temperature range	-40 … +120 °C

Description	Type	M	Part No.	P.U.
Accessories				
Cable gland IP68, plastic material, gray	Connection range 6 – 12 mm	20	Z5.507.1353.0	10
Cable gland IP68, plastic material, gray	Connection range 8 – 13 mm	20	Z5.507.1321.0	10
Cable gland IP68, plastic material, gray	Connection range 7 – 16 mm	25	Z5.507.1553.0	10
Cable gland IP68, nickel-plated brass	Connection range 11 – 18 mm	25	Z5.507.1521.0	10
Cable gland IP68, plastic material, gray	Connection range 10 – 21 mm	32	Z5.507.1753.0	10
Cable gland IP68, nickel-plated brass	Connection range 15 – 21 mm	32	Z5.507.1721.0	10
Strain relief IP54, nickel-plated brass	Connection range 9 – 13.5 mm	20	Z5.507.9621.0	10
Strain relief IP54, nickel-plated brass	Connection range 14 – 20 mm	25	Z5.507.9721.0	10
Strain relief IP54, nickel-plated brass	Connection range 19 – 29 mm	32	Z5.507.9821.0	10
Contact inserts				
Size 6H see the product matrix			Page 24–25	

Dimensions

Hoods

Lateral cable entry,

with cable gland
IP54

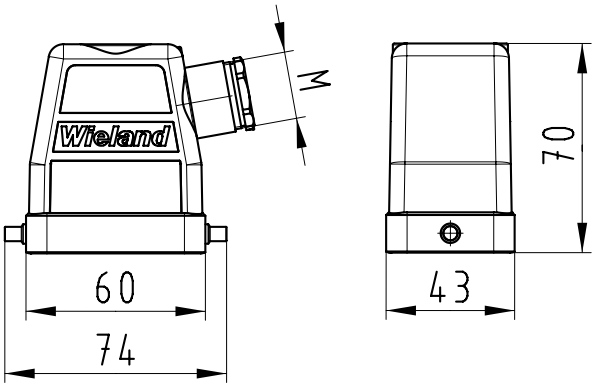

Top cable entry,

with cable gland
IP54

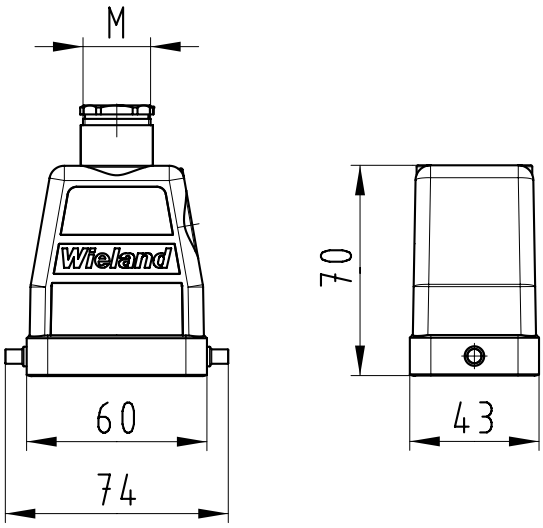

Bases, single locking lever
Size 6

Bases, Size 6

open

without cover
with cover

closed
1 cable gland

without cover
with cover

closed
1 cable gland, bottom

without cover
with cover

Description	Type	M	Part No.	P.U.
500 V Bases, size 6	**Aluminum housing**			
Open-bottom base				
without cover	BAS GUT GK 6 A		70.320.0628.0	1
with cover	BAS GUT GP 6 A		70.325.0628.0	1
Closed-bottom base				
2 cable glands, 2 x M20				
without cover				
with cable gland, IP54, →|Ø|← 3 – 14.5 mm	BAS GUT GL 6 M20 A0	20	70.330.0635.0	1
with threaded collar	BAS GUT GL 6 M20 A1	20	70.330.0635.1	1
with cover				
with cable gland, IP54, →|Ø|← 3 – 14.5 mm	BAS GUT GR 6 M20 A0	20	70.340.0635.0	1
with threaded collar	BAS GUT GR 6 M20 A1	20	70.340.0635.1	1
2 cable glands, 2 x M25				
without cover				
with cable gland, IP54, →|Ø|← 7.5 – 19 mm	BAS GUT GL 6 M25 A0	25	70.334.0635.0	1
with threaded collar	BAS GUT GL 6 M25 A1	25	70.334.0635.1	1
1 cable gland, left, 1 x M20				
without cover				
with cable gland, IP54, →|Ø|← 3 – 14.5 mm	BAS GUT GM 6 M20 A0	20	70.331.0635.0	1
with threaded collar	BAS GUT GM 6 M20 A1	20	70.331.0635.1	1
with cover				
with cable gland, IP54, →|Ø|← 3 – 14.5 mm	BAS GUT GS 6 M20 A0	20	70.341.0635.0	1
with threaded collar	BAS GUT GS 6 M20 A1	20	70.341.0635.1	1
1 cable gland, left, 1 x M25				
without cover				
with cable gland, IP54, →|Ø|← 7.5 – 19 mm	BAS GUT GM 6 M25 A0	25	70.335.0635.0	1
with threaded collar	BAS GUT GM 6 M25 A1	25	70.335.0635.1	1
1 cable gland, right, 1 x M20				
without cover				
with cable gland, IP54, →|Ø|← 3 – 14.5 mm	BAS GUT GN 6 M20 A0	20	70.332.0635.0	1
with threaded collar	BAS GUT GN 6 M20 A1	20	70.332.0635.1	1
with cover				
with cable gland, IP54, →|Ø|← 3 – 14.5 mm	BAS GUT GT 6 M20 A0	20	70.342.0635.0	1
with threaded collar	BAS GUT GT 6 M20 A1	20	70.342.0635.1	1
1 cable gland, right, 1 x M25				
without cover				
with cable gland, IP54, →|Ø|← 7.5 – 19 mm	BAS GUT GN 6 M25 A0	25	70.336.0635.0	1
with threaded collar	BAS GUT GN 6 M25 A1	25	70.336.0635.1	1
1 cable gland, bottom, 1 x M20				
without cover				
with cable gland, IP54, →|Ø|← 3 – 14.5 mm	BAS GUT GO 6 M20 A0	20	70.333.0635.0	1
with threaded collar	BAS GUT GO 6 M20 A1	20	70.333.0635.1	1
with cover				
with cable gland, IP54, →|Ø|← 3 – 14.5 mm	BAS GUT GU 6 M20 A0	20	70.343.0635.0	1
with threaded collar	BAS GUT GU 6 M20 A1	20	70.343.0635.1	1
1 cable gland, bottom, 1 x M25				
without cover				
with cable gland, IP54, →|Ø|← 7.5 – 19 mm	BAS GUT GO 6 M25 A0	25	70.337.0635.0	1
with threaded collar	BAS GUT GO 6 M25 A1	25	70.337.0635.1	1

Technical data	
Material	Die cast aluminum alloy
Surface	silicon-free
Locking levers	Handle: Polyamide, UL94-V0; stainless steel: V2A
Gasket	NBR
Degree of protection	
with latched locking levers	IP54
with appropriate cable glands	IP65
Temperature range	-40 … +120 °C

Description	Type	M	Part No.	P.U.
Accessories				
Cable gland IP68, plastic material, gray	Connection range 6 – 12 mm	20	Z5.507.1353.0	10
Cable gland IP68, nickel-plated brass	Connection range 8 – 13 mm	20	Z5.507.1321.0	10
Cable gland IP68, plastic material, gray	Connection range 7 – 16 mm	25	Z5.507.1553.0	10
Cable gland IP68, nickel-plated brass	Connection range 11 – 18 mm	25	Z5.507.1521.0	10
Contact inserts				
Size 6 see the product matrix			Page 24–25	

Dimensions

Bases

open

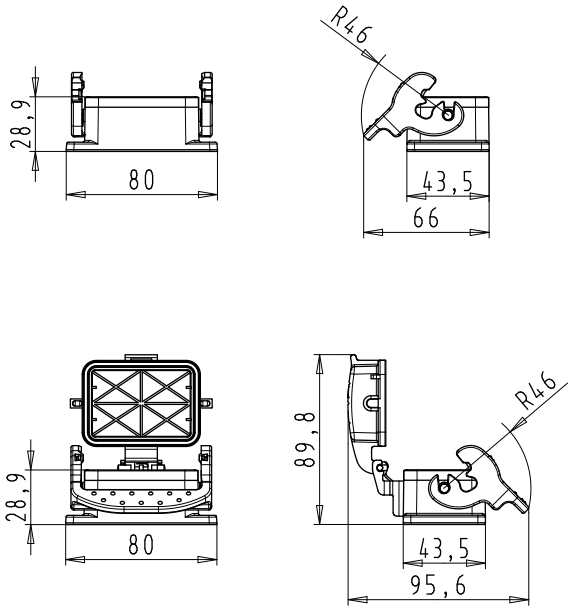

closed, 2 cable glands

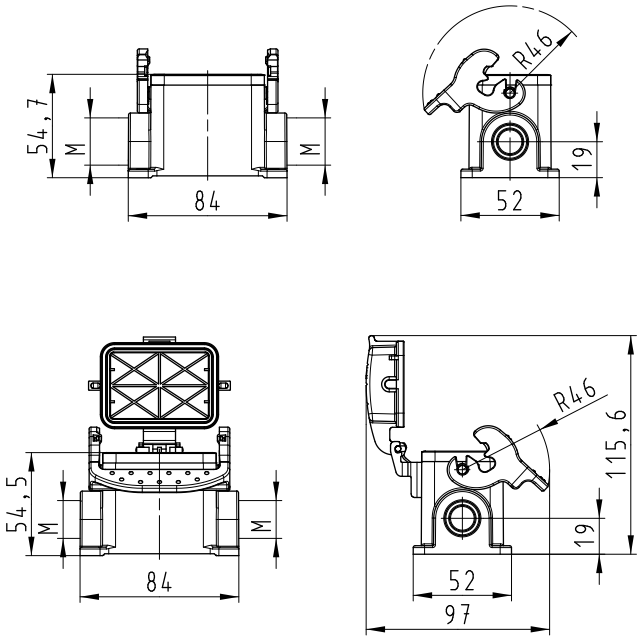

closed, 1 cable gland

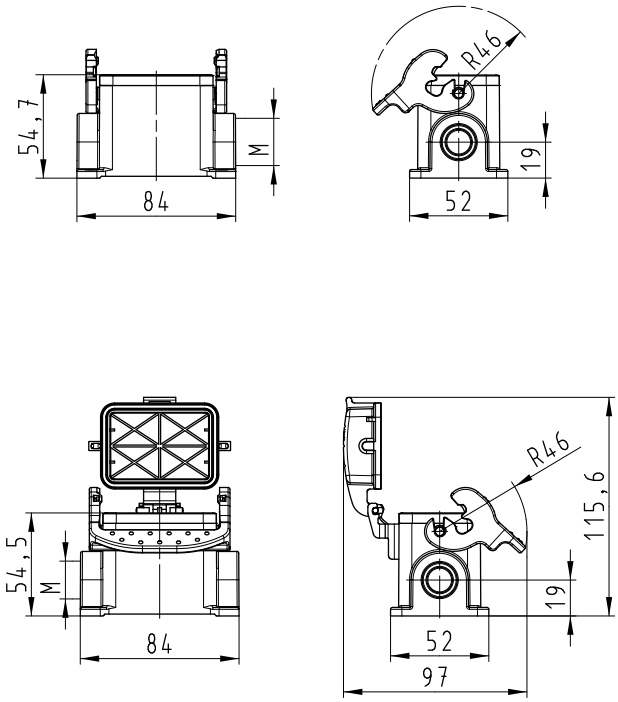

closed, 1 cable gland, bottom

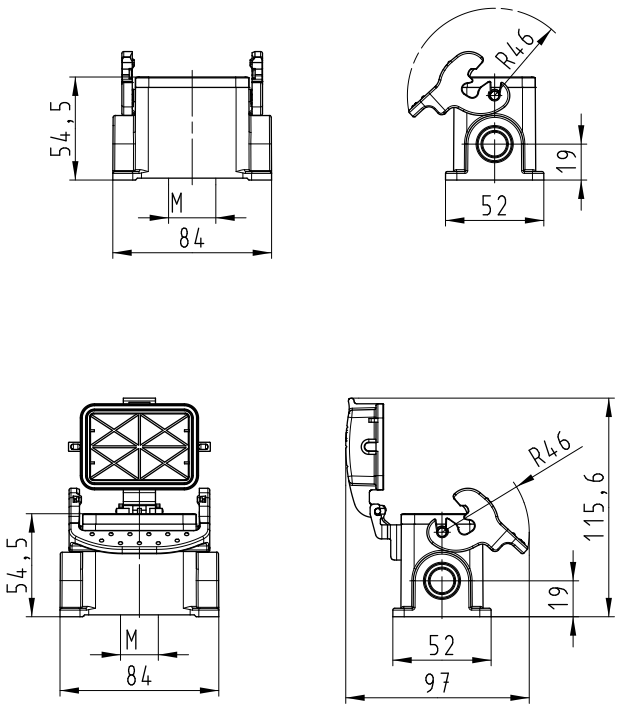

Bases, single locking lever
Size 6H, increased height design

Bases
Size 6H,
increased height design

closed M25
2 cable glands

closed M32
2 cable glands

Description	Type	M	Part No.	P.U.
Bases, size 6H	**Aluminum housing**			
Closed-bottom base				
2 cable glands, 2 x M25				
without cover				
with cable gland, IP54, ⇸|Ø|⇷ 7.5 – 19 mm	BAS GUT GL 6H M25 A0	25	73.330.0635.0	1
with threaded collar	BAS GUT GL 6H M25 A1	25	73.330.0635.1	1
with cover				
with cable gland, IP54, ⇸|Ø|⇷ 7.5 – 19 mm	BAS GUT GR 6H M25 A0	25	73.340.0635.0	1
with threaded collar	BAS GUT GR 6H M25 A1	25	73.340.0635.1	1
2 cable glands, 2 x M32				
without cover				
with cable gland, IP54, ⇸|Ø|⇷ 15 – 26.5 mm	BAS GUT GL 6H M32 A0	32	73.334.0635.0	1
with threaded collar	BAS GUT GL 6H M32 A1	32	73.334.0635.1	1
with cover				
with cable gland, IP54, ⇸|Ø|⇷ 15 – 26.5 mm	BAS GUT GR 6H M32 A0	32	73.344.0635.0	1
with threaded collar	BAS GUT GR 6H M32 A1	32	73.344.0635.1	1
1 cable gland, left, 1 x M25				
without cover				
with cable gland, IP54, ⇸|Ø|⇷ 7.5 – 19 mm	BAS GUT GM 6H M25 A0	25	73.331.0635.0	1
with threaded collar	BAS GUT GM 6H M25 A1	25	73.331.0635.1	1
with cover				
with cable gland, IP54, ⇸|Ø|⇷ 7.5 – 19 mm	BAS GUT GS 6H M25 A0	25	73.341.0635.0	1
with threaded collar	BAS GUT GS 6H M25 A1	25	73.341.0635.1	1
1 cable gland, left, 1 x M32				
without cover				
with cable gland, IP54, ⇸|Ø|⇷ 15 – 26.5 mm	BAS GUT GM 6H M32 A0	32	73.335.0635.0	1
with threaded collar	BAS GUT GM 6H M32 A1	32	73.335.0635.1	1
with cover				
with cable gland, IP54, ⇸|Ø|⇷ 15 – 26.5 mm	BAS GUT GS 6H M32 A0	32	73.345.0635.0	1
with threaded collar	BAS GUT GS 6H M32 A1	32	73.345.0635.1	1
1 cable gland, right, 1 x M25				
with cover				
with cable gland, IP54, ⇸|Ø|⇷ 7.5 – 19 mm	BAS GUT GT 6H M25 A0	25	73.342.0635.0	1
with threaded collar	BAS GUT GT 6H M25 A1	25	73.342.0635.1	1
1 cable gland, right, 1 x M32				
with cover				
with cable gland, IP54, ⇸|Ø|⇷ 15 – 26.5 mm	BAS GUT GT 6H M32 A0	32	73.346.0635.0	1
with threaded collar	BAS GUT GT 6H M32 A1	32	73.346.0635.1	1

Technical data	
Material	Die cast aluminum alloy
Surface	silicon-free
Locking levers	Handle: Polyamide, UL94-V0; stainless steel: V2A
Gasket	NBR
Degree of protection	
with latched locking levers	IP54
with appropriate cable glands	IP65
Temperature range	-40 … +120 °C

Description	Type	M	Part No.	P.U.
Accessories				
Cable gland IP68, plastic material, gray	Connection range 7 – 16 mm	25	Z5.507.1553.0	10
Cable gland IP68, nickel-plated brass	Connection range 11 – 18 mm	25	Z5.507.1521.0	10
Cable gland IP68, plastic material, gray	Connection range 10 – 21 mm	32	Z5.507.1753.0	10
Cable gland IP68, nickel-plated brass	Connection range 15 – 21 mm	32	Z5.507.1721.0	10
Contact inserts				
Size 6H see the product matrix			Page 24–25	

Dimensions

Bases

closed, 2 cable glands

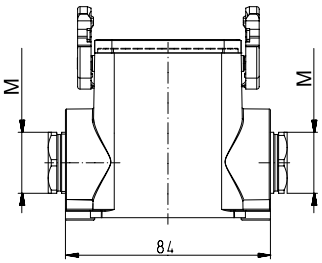

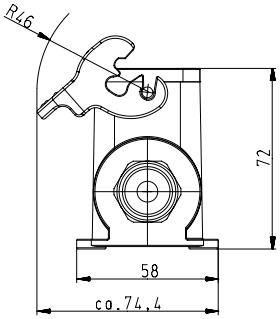

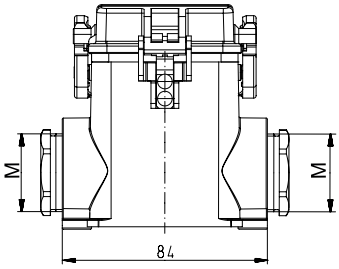

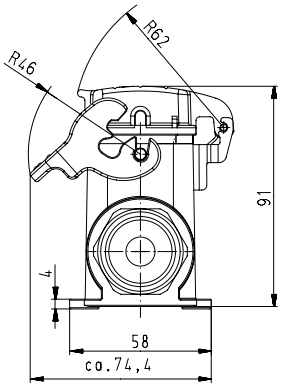

closed, 1 cable gland

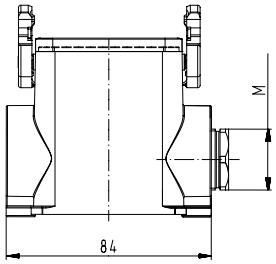

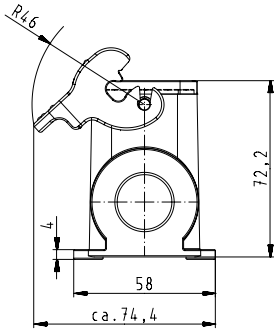

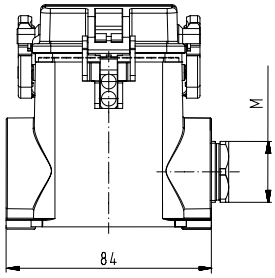

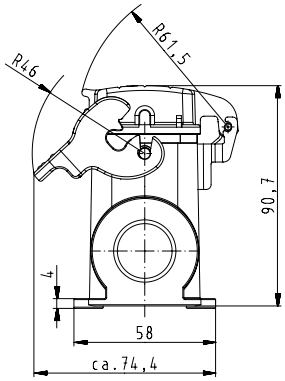

Hoods, single locking lever
Size 10

Hoods
Size 10

Lateral cable entry

Top cable entry

Multipole connectors for cable-to-cable couplings

Description	Type	M	Part No.	P.U.
Hoods, size 10	**Aluminum housing**			
Lateral cable entry M20				
with cable gland, IP54, ➞IØI⇜ 3 – 14.5 mm	BAS GOT GG 10 M20 A0	20	71.350.1035.0	1
with threaded collar	BAS GOT GG 10 M20 A1	20	71.350.1035.1	1
Lateral cable entry M25				
with cable gland, IP54, ➞IØI⇜ 7.5 – 19 mm	BAS GOT GG 10 M25 A0	25	71.353.1035.0	1
with threaded collar	BAS GOT GG 10 M25 A1	25	71.353.1035.1	1
Top cable entry M20				
with cable gland, IP54, ➞IØI⇜ 3 – 14.5 mm	BAS GOT GI 10 M20 A0	20	71.352.1035.0	1
with threaded collar	BAS GOT GI 10 M20 A1	20	71.352.1035.1	1
Top cable entry M25				
with cable gland, IP54, ➞IØI⇜ 7.5 – 19 mm	BAS GOT GI 10 M25 A0	25	71.354.1035.0	1
with threaded collar	BAS GOT GI 10 M25 A1	25	71.354.1035.1	1
Multipole connectors for cable-to-cable couplings M20				
with cable gland, IP54, ➞IØI⇜ 3 – 14.5 mm	BAS GOT GI 10 M20 A0	20	71.352.1035.0	1
with cable gland, IP54, ➞IØI⇜ 3 – 14.5 mm Locking levers and gasket	BAS GOT GL 10 M20 A0	20	71.372.1035.0	1
with threaded collar	BAS GOT GI 10 M20 A1	20	71.352.1035.1	1
with threaded collar Locking levers and gasket	BAS GOT GL 10 M20 A1	20	71.372.1035.1	1

Technical data	
Material	Die cast aluminum alloy
Surface	silicon-free
Locking levers at Multipole connectors	Handle: Polyamide, UL94-V0; stainless steel: V2A
Gasket at Multipole connectors	NBR
Degree of protection	
with latched locking levers	IP54
with appropriate cable glands	IP65
Temperature range	-40 … +120 °C

Description	Type	M	Part No.	P.U.
Accessories				
Cable gland IP68, plastic material, gray	Connection range 6 – 12 mm	20	Z5.507.1353.0	10
Cable gland IP68, nickel-plated brass	Connection range 8 – 13 mm	20	Z5.507.1321.0	10
Cable gland IP68, plastic material, gray	Connection range 7 – 16 mm	25	Z5.507.1553.0	10
Cable gland IP68, nickel-plated brass	Connection range 11 – 18 mm	25	Z5.507.1521.0	10
Strain relief IP54, nickel-plated brass	Connection range 9 – 13.5 mm	20	Z5.507.9621.0	10
Strain relief IP54, nickel-plated brass	Connection range 14 – 20 mm	25	Z5.507.9721.0	10
Contact inserts				
See the product matrix			Page 24–25	

Dimensions

Hoods

Lateral cable entry

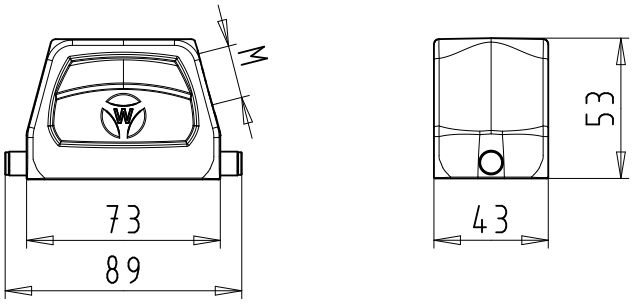

Top cable entry

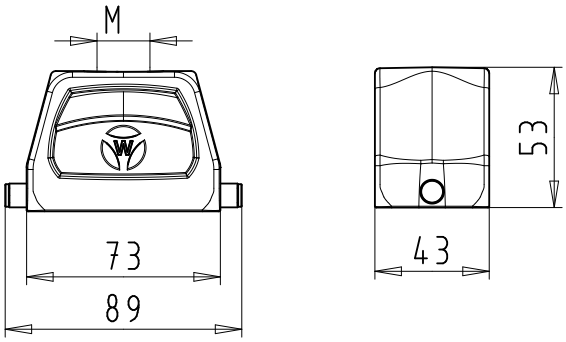

Multipole connectors for cable-to-cable couplings

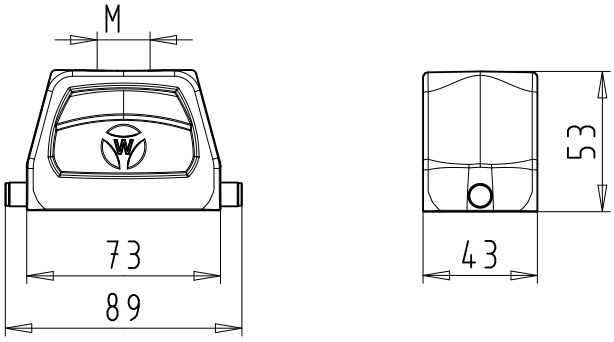

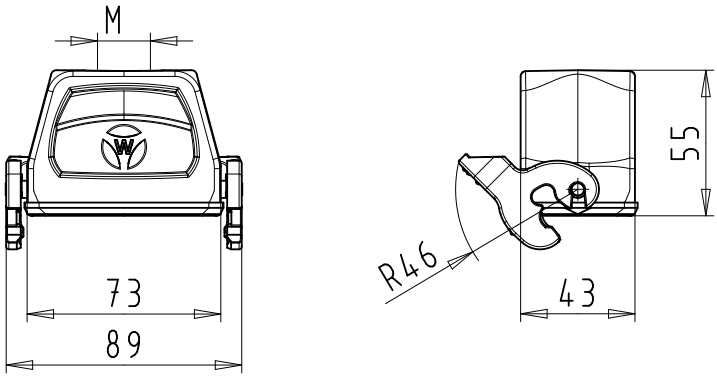

Hoods, single locking lever
Size 10H, increased height design

Hoods
Size 10H,
increased height design

Lateral cable entry

Top cable entry

Description	Type	M	Part No.	P.U.
Hoods, size 10H	**Aluminum housing**			
Lateral cable entry M25				
with cable gland, IP54, →|Ø|← 7.5 – 19 mm	BAS GOT GG 10H M25 A0	25	76.350.1035.0	1
with threaded collar	BAS GOT GG 10H M25 A1	25	76.350.1035.1	1
Lateral cable entry M32				
with cable gland, IP54, →|Ø|← 15 – 26.5 mm	BAS GOT GG 10H M32 A0	32	76.353.1035.0	1
with threaded collar	BAS GOT GG 10H M32 A1	32	76.353.1035.1	1
Top cable entry M25				
with cable gland, IP54, →|Ø|← 7.5 – 19 mm	BAS GOT GI 10H M25 A0	25	76.352.1035.0	1
with threaded collar	BAS GOT GI 10H M25 A1	25	76.352.1035.1	1
Top cable entry M32				
with cable gland, IP54, →|Ø|← 15 – 26.5 mm	BAS GOT GI 10H M32 A0	32	76.354.1035.0	1
with threaded collar	BAS GOT GI 10H M32 A1	32	76.354.1035.1	1

Technical data	
Material	Die cast aluminum alloy
Surface	silicon-free
Locking levers	–
Gasket	–
Degree of protection	
with latched locking levers	IP54
with appropriate cable glands	IP65
Temperature range	-40 … +120 °C

Description	Type	M	Part No.	P.U.
Accessories				
Cable gland IP68, plastic material, gray	Connection range 6 – 12 mm	20	Z5.507.1353.0	10
Cable gland IP68, plastic material, gray	Connection range 8 – 13 mm	20	Z5.507.1321.0	10
Cable gland IP68, plastic material, gray	Connection range 7 – 16 mm	25	Z5.507.1553.0	10
Cable gland IP68, nickel-plated brass	Connection range 11 – 18 mm	25	Z5.507.1521.0	10
Cable gland IP68, plastic material, gray	Connection range 10 – 21 mm	32	Z5.507.1753.0	10
Cable gland IP68, nickel-plated brass	Connection range 15 – 21 mm	32	Z5.507.1721.0	10
Strain relief IP54, nickel-plated brass	Connection range 9 – 13.5 mm	20	Z5.507.9621.0	10
Strain relief IP54, nickel-plated brass	Connection range 14 – 20 mm	25	Z5.507.9721.0	10
Strain relief IP54, nickel-plated brass	Connection range 19 – 29 mm	32	Z5.507.9821.0	10
Contact inserts				
See the product matrix			Page 24–25	

Dimensions

Hoods

Lateral cable entry

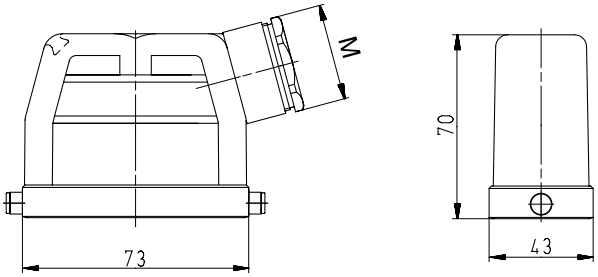

Top cable entry

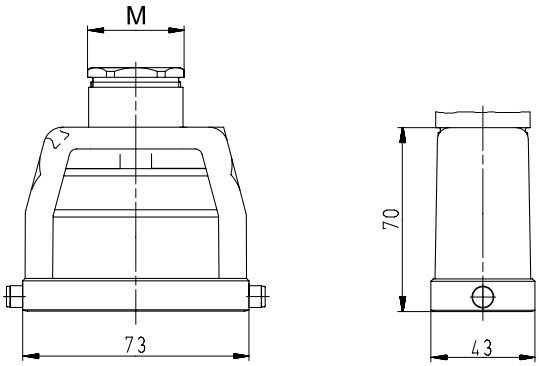

Bases, single locking lever
Size 10

Bases, Size 10

open

without cover
with cover

closed
1 cable gland

without cover
with cover

closed
1 cable gland, bottom

without cover
with cover

Description	Type	M	Part No.	P.U.
Bases, size 10	**Aluminum housing**			
Open-bottom base				
without cover	BAS GUT GK 10 A		71.320.1028.0	1
with cover	BAS GUT GP 10 A		71.325.1028.0	1
Closed-bottom base				
2 cable glands, 2 x M20				
without cover				
with cable gland, IP54, ➞|Ø|⇜ 3 – 14.5 mm	BAS GUT GL 10 M20 A0	20	71.330.1035.0	1
with threaded collar	BAS GUT GL 10 M20 A1	20	71.330.1035.1	1
with cover				
with cable gland, IP54, ➞|Ø|⇜ 3 – 14.5 mm	BAS GUT GR 10 M20 A0	20	71.340.1035.0	1
with threaded collar	BAS GUT GR 10 M20 A1	20	71.340.1035.1	1
1 cable gland, left, 1 x M20				
without cover				
with cable gland, IP54, ➞|Ø|⇜ 3 – 14.5 mm	BAS GUT GM 10 M20 A0	20	71.331.1035.0	1
with threaded collar	BAS GUT GM 10 M20 A1	20	71.331.1035.1	1
with cover				
with cable gland, IP54, ➞|Ø|⇜ 3 – 14.5 mm	BAS GUT GS 10 M20 A0	20	71.341.1035.0	1
with threaded collar	BAS GUT GS 10 M20 A1	20	71.341.1035.1	1
1 cable gland, left, 1 x M25				
without cover				
with cable gland, IP54, ➞|Ø|⇜ 7.5 – 19 mm	BAS GUT GM 10 M25 A0	25	71.335.1035.0	1
with threaded collar	BAS GUT GM 10 M25 A1	25	71.335.1035.1	1
1 cable gland, right, 1 x M20				
with cover				
with cable gland, IP54, ➞|Ø|⇜ 3 – 14.5 mm	BAS GUT GT 10 M20 A0	20	71.342.1035.0	1
with threaded collar	BAS GUT GT 10 M20 A1	20	71.342.1035.1	1
1 cable gland, bottom, 1 x M20				
without cover				
with cable gland, IP54, ➞|Ø|⇜ 3 – 14.5 mm	BAS GUT GO 10 M20 A0	20	71.333.1035.0	1
with threaded collar	BAS GUT GO 10 M20 A1	20	71.333.1035.1	1
with cover				
with cable gland, IP54, ➞|Ø|⇜ 3 – 14.5 mm	BAS GUT GU 10 M20 A0	20	71.343.1035.0	1
with threaded collar	BAS GUT GU 10 M20 A1	20	71.343.1035.1	1

Technical data	
Material	Die cast aluminum alloy
Surface	silicon-free
Locking levers	Handle: Polyamide, UL94-V0; stainless steel: V2A
Gasket	NBR
Degree of protection	
with latched locking levers	IP54
with appropriate cable glands	IP65
Temperature range	-40 … +120 °C

Description	Type	M	Part No.	P.U.
Accessories				
Cable gland IP68, plastic material, gray	Connection range 6 – 12 mm	20	Z5.507.1353.0	10
Cable gland IP68, nickel-plated brass	Connection range 8 – 13 mm	20	Z5.507.1321.0	10
Cable gland IP68, plastic material, gray	Connection range 7 – 16 mm	25	Z5.507.1553.0	10
Cable gland IP68, nickel-plated brass	Connection range 11 – 18 mm	25	Z5.507.1521.0	10
Contact inserts				
See the product matrix			Page 24–25	

All Bases on this page are also available in M25 design.
The fifth digit of the part number always increases by 4 for M25 compared to the corresponding M20 designs.
Example:
71.34**1**.1035.0 for M20 becomes 71.34**5**.1035.0 for M25

Dimensions

Bases

open

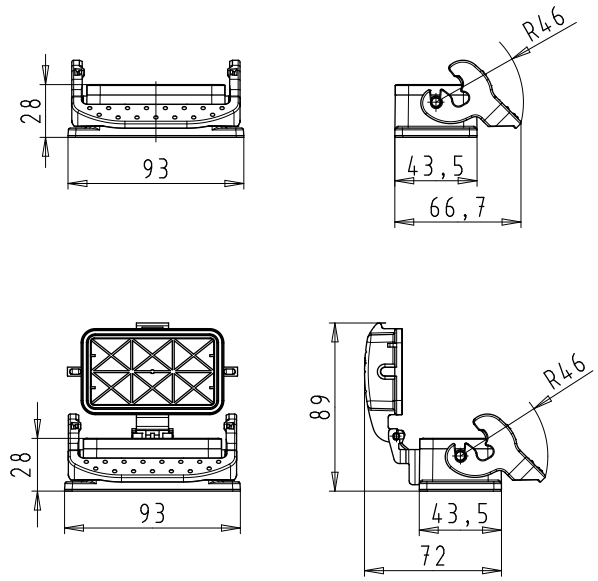

closed, 2 cable glands

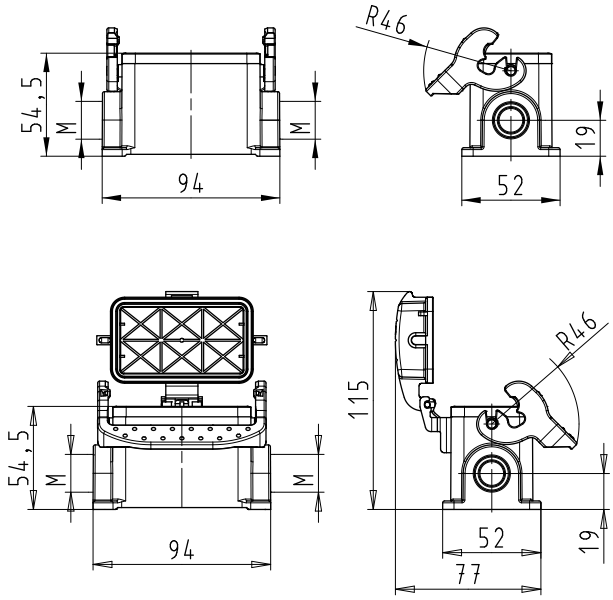

closed, 1 cable gland

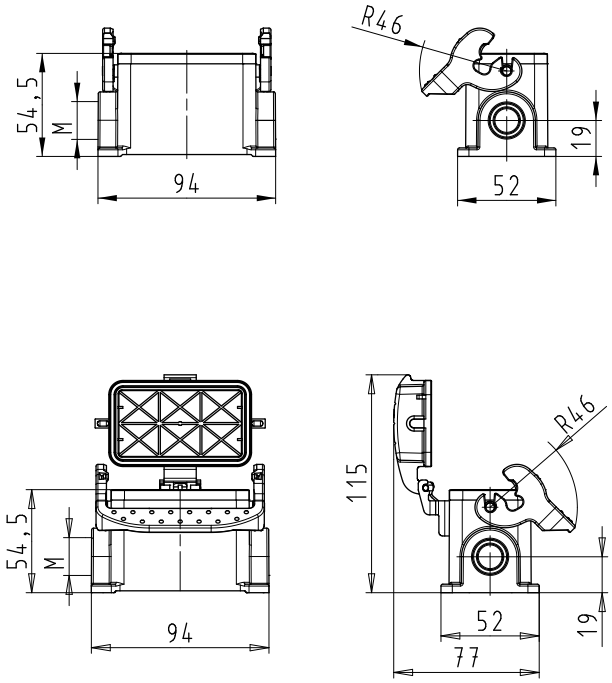

closed, 1 cable gland, bottom

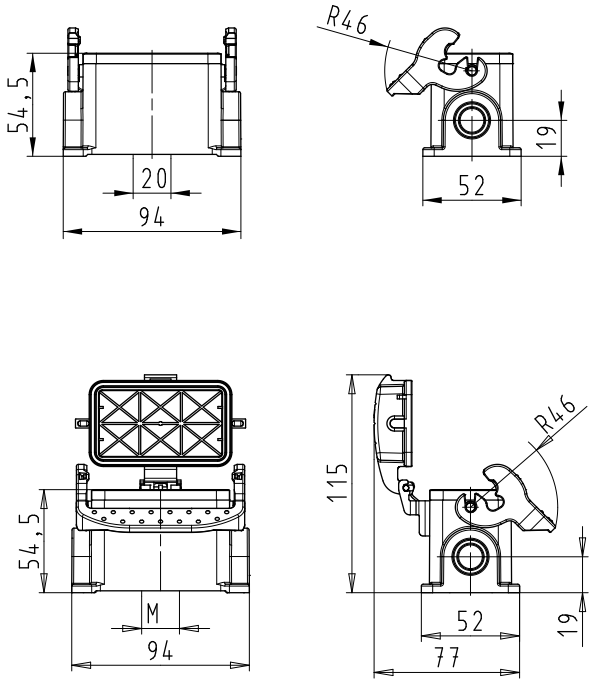

Bases, single locking lever
Size 10H, increased height design

Bases
Size 10H, increased height design

closed M25

without cover
with cover

closed M32

with threaded collar

Description	Type	M	Part No.	P.U.
Bases, size 10H	**Aluminum housing**			
Closed-bottom base				
2 cable glands, 2 x M25				
without cover				
with cable gland, IP54, ⇸|Ø|⇷ 7.5 – 19 mm	BAS GUT GL 10H M25 A0	25	76.330.1035.0	1
with threaded collar	BAS GUT GL 10H M25 A1	25	76.330.1035.1	1
with cover				
with cable gland, IP54, ⇸|Ø|⇷ 7.5 – 19 mm	BAS GUT GR 10H M25 A0	25	76.340.1035.0	1
with threaded collar	BAS GUT GR 10H M25 A1	25	76.340.1035.1	1
2 cable glands, 2 x M32				
without cover				
with cable gland, IP54, ⇸|Ø|⇷ 15 – 26.5 mm	BAS GUT GL 10H M32 A0	32	76.334.1035.0	1
with threaded collar	BAS GUT GL 10H M32 A1	32	76.334.1035.1	1
with cover				
with cable gland, IP54, ⇸|Ø|⇷ 15 – 26.5 mm	BAS GUT GR 10H M32 A0	32	76.344.1035.0	1
with threaded collar	BAS GUT GR 10H M32 A1	32	76.344.1035.1	1
1 cable gland, left, 1 x M25				
without cover				
with cable gland, IP54, ⇸|Ø|⇷ 7.5 – 19 mm	BAS GUT GM 10H M25 A0	25	76.331.1035.0	1
with threaded collar	BAS GUT GM 10H M25 A1	25	76.331.1035.1	1
with cover				
with cable gland, IP54, ⇸|Ø|⇷ 7.5 – 19 mm	BAS GUT GS 10H M25 A0	25	76.341.1035.0	1
with threaded collar	BAS GUT GS 10H M25 A1	25	76.341.1035.1	1
1 cable gland, left, 1 x M32				
without cover				
with cable gland, IP54, ⇸|Ø|⇷ 15 – 26.5 mm	BAS GUT GM 10H M32 A0	32	76.335.1035.0	1
with threaded collar	BAS GUT GM 10H M32 A1	32	76.335.1035.1	1
with cover				
with cable gland, IP54, ⇸|Ø|⇷ 15 – 26.5 mm	BAS GUT GR 10H M32 A0	32	76.345.1035.0	1
with threaded collar	BAS GUT GR 10H M32 A1	32	76.345.1035.1	1
1 cable gland, right, 1 x M25				
with cover				
with cable gland, IP54, ⇸|Ø|⇷ 7.5 – 19 mm	BAS GUT GT 10H M25 A0	25	76.342.1035.0	1
with threaded collar	BAS GUT GT 10H M25 A1	25	76.342.1035.1	1
1 cable gland, right, 1 x M32				
with cover				
with cable gland, IP54, ⇸|Ø|⇷ 15 – 26.5 mm	BAS GUT GT 10H M32 A0	32	76.346.1035.0	1
with threaded collar	BAS GUT GT 10H M32 A1	32	76.346.1035.1	1

Technical data	
Material	Die cast aluminum alloy
Surface	silicon-free
Locking levers	Handle: Polyamide, UL94-V0; stainless steel: V2A
Gasket	NBR
Degree of protection	
with latched locking levers	IP54
with appropriate cable glands	IP65
Temperature range	-40 … +120 °C

Description	Type	M	Part No.	P.U.
Accessories				
Cable gland IP68, plastic material, gray	Connection range 7 – 16 mm	25	Z5.507.1553.0	10
Cable gland IP68, nickel-plated brass	Connection range 11 – 18 mm	25	Z5.507.1521.0	10
Cable gland IP68, plastic material, gray	Connection range 10 – 21 mm	32	Z5.507.1753.0	10
Cable gland IP68, nickel-plated brass	Connection range 15 – 21 mm	32	Z5.507.1721.0	10
Contact inserts				
See the product matrix			Page 24–25	

Dimensions

Bases

closed, 2 cable glands

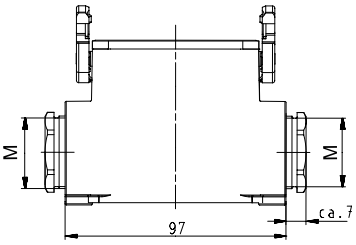

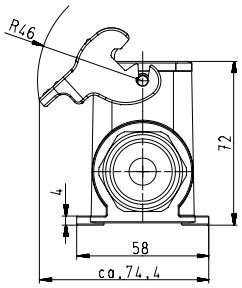

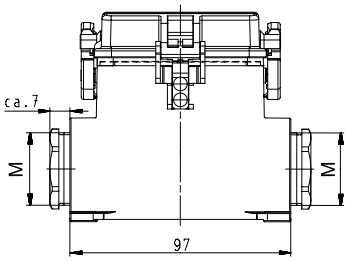

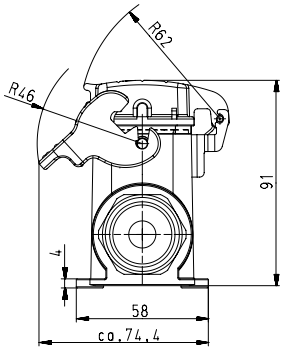

closed, 1 cable gland

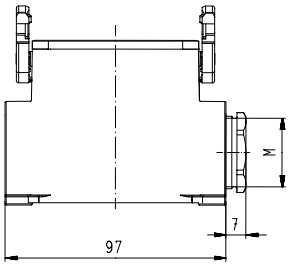

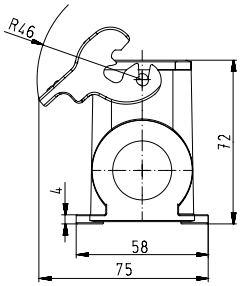

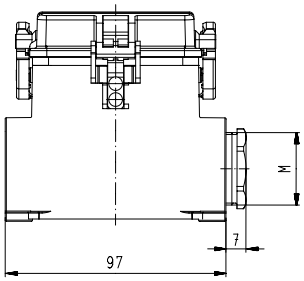

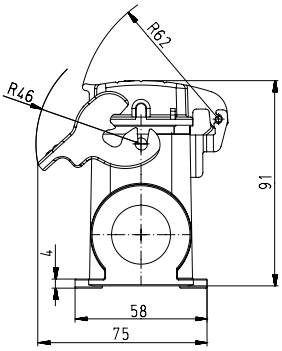

Hoods, double locking lever
Size 10

Hoods
Size 10

Lateral cable entry

Top cable entry

Description	Type	M	Part No.	P.U.
Hoods, size 10	**Aluminum housing**			
Lateral cable entry M20				
with cable gland, IP54, ⇸IØI⇷ 3 – 14.5 mm	BAS GOT GA 10 M20 A0	20	70.350.1035.0	1
with threaded collar	BAS GOT GA 10 M20 A1	20	70.350.1035.1	1
Lateral cable entry M25				
with cable gland, IP54, ⇸IØI⇷ 7.5 – 19 mm	BAS GOT GA 10 M25 A0	25	70.353.1035.0	1
with threaded collar	BAS GOT GA 10 M25 A1	25	70.353.1035.1	1
Top cable entry M20				
with cable gland, IP54, ⇸IØI⇷ 3 – 14.5 mm	BAS GOT GC 10 M20 A0	20	70.352.1035.0	1
with threaded collar	BAS GOT GC 10 M20 A1	20	70.352.1035.1	1
Top cable entry M25				
with cable gland, IP54, ⇸IØI⇷ 7.5 – 19 mm	BAS GOT GC 10 M25 A0	25	70.354.1035.0	1
with threaded collar	BAS GOT GC 10 M25 A1	25	70.354.1035.1	1

Technical data	
Material metal	Die cast aluminum alloy
Surface	silicon-free
Locking levers at Multipole connectors	-
Gasket at Multipole connectors	-
Degree of protection	
with latched locking levers	IP54
with appropriate cable glands	IP65
Temperature range	-40 … +120 °C

Description	Type	M	Part No.	P.U.
Accessories				
Cable gland IP68, plastic material, gray	Connection range 6 – 12 mm	20	Z5.507.1353.0	10
Cable gland IP68, nickel-plated brass	Connection range 8 – 13 mm	20	Z5.507.1321.0	10
Cable gland IP68, plastic material, gray	Connection range 7 – 16 mm	25	Z5.507.1553.0	10
Cable gland IP68, nickel-plated brass	Connection range 11 – 18 mm	25	Z5.507.1521.0	10
Strain relief IP54, nickel-plated brass	Connection range 9 – 13.5 mm	20	Z5.507.9621.0	10
Strain relief IP54, nickel-plated brass	Connection range 14 – 20 mm	25	Z5.507.9721.0	10
Contact inserts				
See the product matrix			Page 24–25	

Dimensions

Hoods

Lateral cable entry

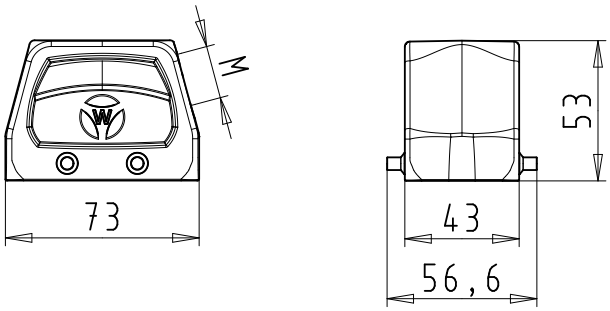

Top cable entry

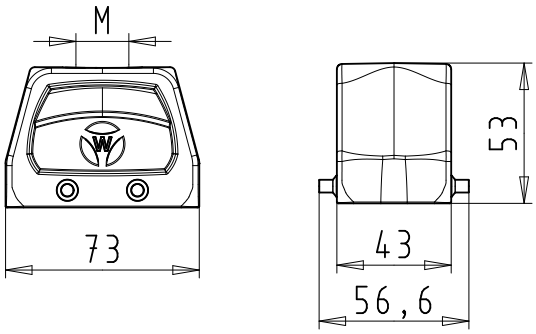

Hoods, double locking lever with Locking levers, Size 10

Hoods Size 10

Lateral cable entry

Top cable entry

Multipole connectors for cable-to-cable couplings

Description	Type	M	Part No.	P.U.
Hoods, size 10	**Aluminum housing**			
Lateral cable entry M20				
with cable gland, IP54, ➞IØI⇜ 3 – 14.5 mm	BAS GOT GD 10 M20 A0	20	70.355.1035.0	1
with threaded collar	BAS GOT GD 10 M20 A1	20	70.355.1035.1	1
Lateral cable entry M25				
with cable gland, IP54, ➞IØI⇜ 7.5 – 19 mm	BAS GOT GD 10 M25 A0	25	70.358.1035.0	1
with threaded collar	BAS GOT GD 10 M25 A1	25	70.358.1035.1	1
Top cable entry M20				
with cable gland, IP54, ➞IØI⇜ 3 – 14.5 mm	BAS GOT GF 10 M20 A0	20	70.357.1035.0	1
with threaded collar	BAS GOT GF 10 M20 A1	20	70.357.1035.1	1
Top cable entry M25				
with cable gland, IP54, ➞IØI⇜ 7.5 – 19 mm	BAS GOT GF 10 M25 A0	25	70.359.1035.0	1
with threaded collar	BAS GOT GF 10 M25 A1	25	70.359.1035.1	1
Multipole connectors for cable-to-cable couplings M20				
with cable gland, IP54, ➞IØI⇜ 3 – 14.5 mm	BAS GOT GC 10 M20 A0	20	70.352.1035.0	1
with cable gland, IP54, ➞IØI⇜ 3 – 14.5 mm Locking levers and gasket	BAS GOT GK 10 M20 A0	20	70.372.1035.0	1
with threaded collar	BAS GOT GC 10 M20 A1	20	70.352.1035.1	1
with threaded collar Locking levers and gasket	BAS GOT GK 10 M20 A1	20	70.372.1035.1	1

Technical data	
Material	Die cast aluminum alloy
Surface	silicon-free
Locking levers	Handle: Polyamide, UL94-V0; stainless steel: V2A
Gasket for Multipole connectors	NBR
Degree of protection	
with latched locking levers	IP54
with appropriate cable glands	IP65
Temperature range	-40 … +120 °C

Description	Type	M	Part No.	P.U.
Accessories				
Cable gland IP68, plastic material, gray	Connection range 6 – 12 mm	20	Z5.507.1353.0	10
Cable gland IP68, nickel-plated brass	Connection range 8 – 13 mm	20	Z5.507.1321.0	10
Cable gland IP68, plastic material, gray	Connection range 7 – 16 mm	25	Z5.507.1553.0	10
Cable gland IP68, nickel-plated brass	Connection range 11 – 18 mm	25	Z5.507.1521.0	10
Strain relief IP54, nickel-plated brass	Connection range 9 – 13.5 mm	20	Z5.507.9621.0	10
Strain relief IP54, nickel-plated brass	Connection range 14 – 20 mm	25	Z5.507.9721.0	10
Contact inserts				
See the product matrix			Page 24-25	

Dimensions

Hoods with Locking levers

Lateral cable entry

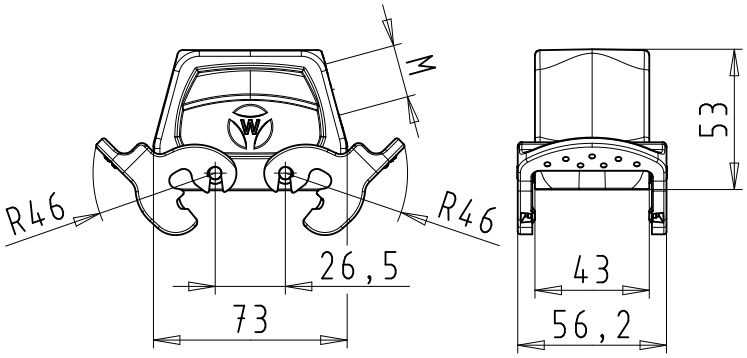

Top cable entry

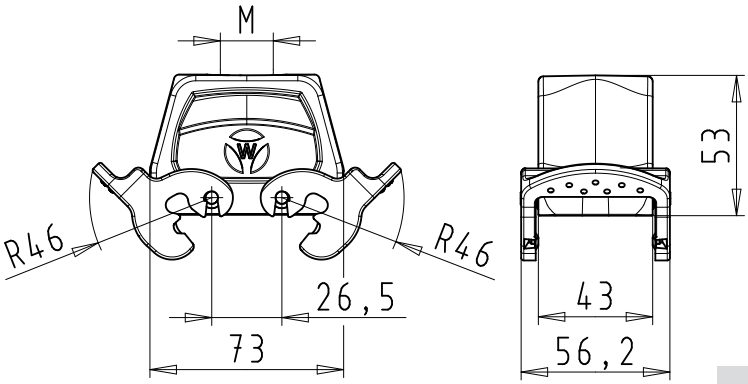

Multipole connectors for cable-to-cable couplings

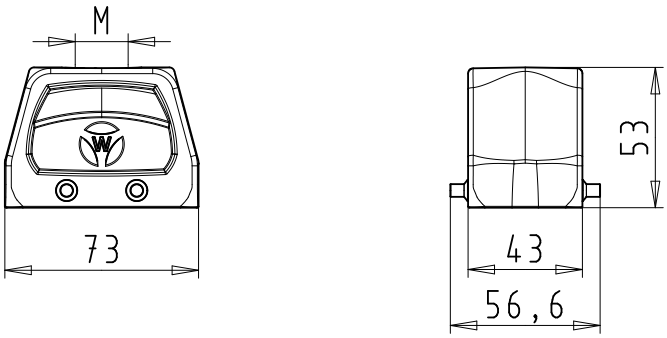

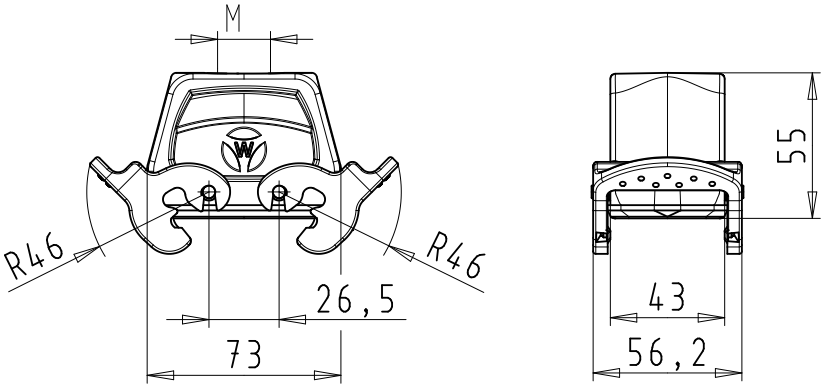

Hoods, double locking lever
Size 10H, increased height design

Hoods
Size 10H,
increased height design

Lateral cable entry

Top cable entry

Description	Type	M	Part No.	P.U.
Hoods, size 10H	**Aluminum housing**			
Lateral cable entry M25				
with cable gland, IP54, ⇸Ø⇷ 7.5 – 19 mm	BAS GOT GA 10H M25 50 A0	25	73.350.1035.0	1
with threaded collar	BAS GOT GA 10H M25 50 A1	25	73.350.1035.1	1
Lateral cable entry M32				
with cable gland, IP54, ⇸Ø⇷ 15 – 26.5 mm	BAS GOT GA 10H M32 50 A0	32	73.353.1035.0	1
with threaded collar	BAS GOT GA 10H M32 50 A1	32	73.353.1035.1	1
Top cable entry M25				
with cable gland, IP54, ⇸Ø⇷ 7.5 – 19 mm	BAS GOT GC 10H M25 50 A0	25	73.352.1035.0	1
with threaded collar	BAS GOT GC 10H M25 50 A1	25	73.352.1035.1	1
Top cable entry M32				
with cable gland, IP54, ⇸Ø⇷ 15 – 26.5 mm	BAS GOT GC 10H M32 50 A0	32	73.354.1035.0	1
with threaded collar	BAS GOT GC 10H M32 50 A1	32	73.354.1035.1	1

Technical data	
Material	Die cast aluminum alloy
Surface	silicon-free
Locking levers	–
Gasket	–
Degree of protection	
with latched locking levers	IP54
with appropriate cable glands	IP65
Temperature range	-40 … +120 °C

Description	Type	M	Part No.	P.U.
Accessories				
Cable gland IP68, plastic material, gray	Connection range 6 – 12 mm	20	Z5.507.1353.0	10
Cable gland IP68, plastic material, gray	Connection range 8 – 13 mm	20	Z5.507.1321.0	10
Cable gland IP68, plastic material, gray	Connection range 7 – 16 mm	25	Z5.507.1553.0	10
Cable gland IP68, nickel-plated brass	Connection range 11 – 18 mm	25	Z5.507.1521.0	10
Cable gland IP68, plastic material, gray	Connection range 10 – 21 mm	32	Z5.507.1753.0	10
Cable gland IP68, nickel-plated brass	Connection range 15 – 21 mm	32	Z5.507.1721.0	10
Strain relief IP54, nickel-plated brass	Connection range 9 – 13.5 mm	20	Z5.507.9621.0	10
Strain relief IP54, nickel-plated brass	Connection range 14 – 20 mm	25	Z5.507.9721.0	10
Strain relief IP54, nickel-plated brass	Connection range 19 – 29 mm	32	Z5.507.9821.0	10
Contact inserts				
See the product matrix			Page 24–25	

Dimensions

Hoods

Lateral cable entry

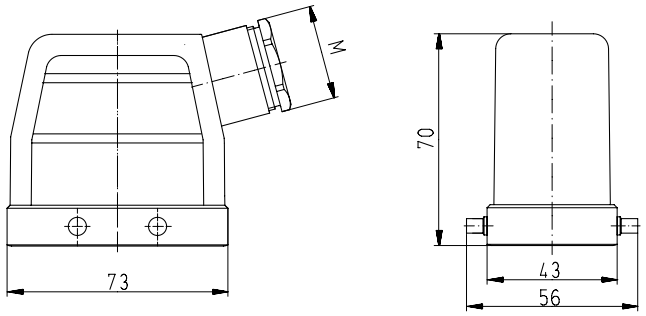

Top cable entry

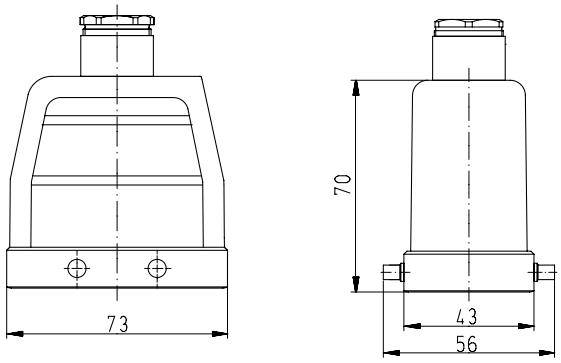

Bases, double locking lever
Size 10

Bases, Size 10

open

without cover
with cover

closed
1 cable gland

without cover
with cover

closed
1 cable gland, bottom

without cover
with cover

Description	Type	M	Part No.	P.U.
Bases, size 10	**Aluminum housing**			
Open-bottom base				
without cover	BAS GUT GA 10 A		70.320.1028.0	1
with cover	BAS GUT GE 10 A		70.325.1028.0	1
Closed-bottom base				
2 cable glands, 2 x M20				
without cover				
with cable gland, IP54, ➞|Ø|⇜ 3 – 14.5 mm	BAS GUT GB 10 M20 A0	20	70.330.1035.0	1
with threaded collar	BAS GUT GB 10 M20 A1	20	70.330.1035.1	1
with cover				
with cable gland, IP54, ➞|Ø|⇜ 3 – 14.5 mm	BAS GUT GF 10 M20 A0	20	70.340.1035.0	1
with threaded collar	BAS GUT GF 10 M20 A1	20	70.340.1035.1	1
2 cable glands, 2 x M25				
without cover				
with cable gland, IP54, ➞|Ø|⇜ 7.5 – 19 mm	BAS GUT GB 10 M25 A0	25	70.334.1035.0	1
with threaded collar	BAS GUT GB 10 M25 A1	25	70.334.1035.1	1
with cover				
with cable gland, IP54, ➞|Ø|⇜ 7.5 – 19 mm	BAS GUT GF 10 M25 A0	25	70.344.1035.0	1
with threaded collar	BAS GUT GF 10 M25 A1	25	70.344.1035.1	1
1 cable gland, left, 1 x M20				
without cover				
with cable gland, IP54, ➞|Ø|⇜ 3 – 14.5 mm	BAS GUT GC 10 M20 A0	20	70.331.1035.0	1
with threaded collar	BAS GUT GC 10 M20 A1	20	70.331.1035.1	1
with cover				
with cable gland, IP54, ➞|Ø|⇜ 3 – 14.5 mm	BAS GUT GG 10 M20 A0	20	70.341.1035.0	1
with threaded collar	BAS GUT GG 10 M20 A1	20	70.341.1035.1	1
1 cable gland, left, 1 x M25				
without cover				
with cable gland, IP54, ➞|Ø|⇜ 7.5 – 19 mm	BAS GUT GC 10 M25 A0	25	70.335.1035.0	1
with threaded collar	BAS GUT GC 10 M25 A1	25	70.335.1035.1	1
1 cable gland, right, 1 x M20				
with cover				
with cable gland, IP54, ➞|Ø|⇜ 3 – 14.5 mm	BAS GUT GH 10 M20 A0	20	70.342.1035.0	1
with threaded collar	BAS GUT GH 10 M20 A1	20	70.342.1035.1	1
1 cable gland, bottom, 1 x M20				
without cover				
with cable gland, IP54, ➞|Ø|⇜ 3 – 14.5 mm	BAS GUT GD 10 M20 A0	20	70.333.1035.0	1
with threaded collar	BAS GUT GD 10 M20 A1	20	70.333.1035.1	1
with cover				
with cable gland, IP54, ➞|Ø|⇜ 3 – 14.5 mm	BAS GUT GI 10 M20 A0	20	70.343.1035.0	1
with threaded collar	BAS GUT GI 10 M20 A1	20	70.343.1035.1	1
1 cable gland, bottom, 1 x M25				
without cover				
with cable gland, IP54, ➞|Ø|⇜ 7.5 – 19 mm	BAS GUT GD 10 M25 A0	25	70.337.1035.0	1
with threaded collar	BAS GUT GD 10 M25 A1	25	70.337.1035.1	1

Technical data	
Material	Die cast aluminum alloy
Surface	silicon-free
Locking levers	Handle: Polyamide, UL94-V0; stainless steel: V2A
Gasket	NBR
Degree of protection	
with latched locking levers	IP54
with appropriate cable glands	IP65
Temperature range	-40 … +120 °C

Description	Type	M	Part No.	P.U.
Accessories				
Cable gland IP68, plastic material, gray	Connection range 6 – 12 mm	20	Z5.507.1353.0	10
Cable gland IP68, nickel-plated brass	Connection range 8 – 13 mm	20	Z5.507.1321.0	10
Cable gland IP68, plastic material, gray	Connection range 7 – 16 mm	25	Z5.507.1553.0	10
Cable gland IP68, nickel-plated brass	Connection range 11 – 18 mm	25	Z5.507.1521.0	10
Contact inserts				
See the product matrix			Page 24–25	

All Bases on this page are also available in M25 design.
The fifth digit of the part number always increases by 4 for M25 compared to the corresponding M20 designs.
Example:
70.34**1**.1035.0 for M20 becomes 70.34**5**.0635.0 for M25

Dimensions

Bases

open

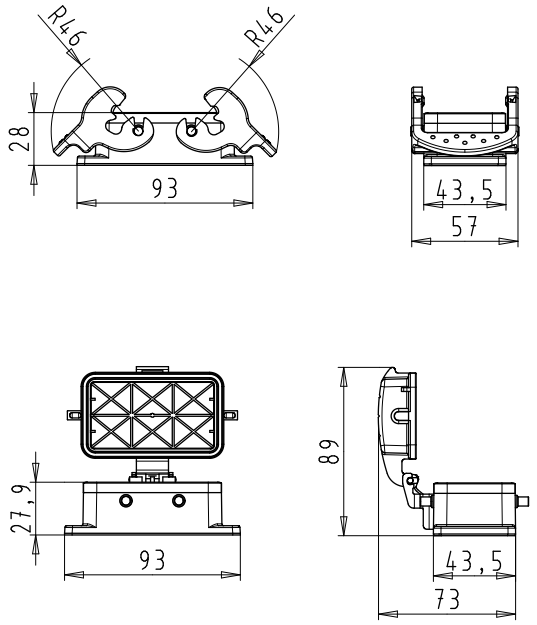

closed, 2 cable glands

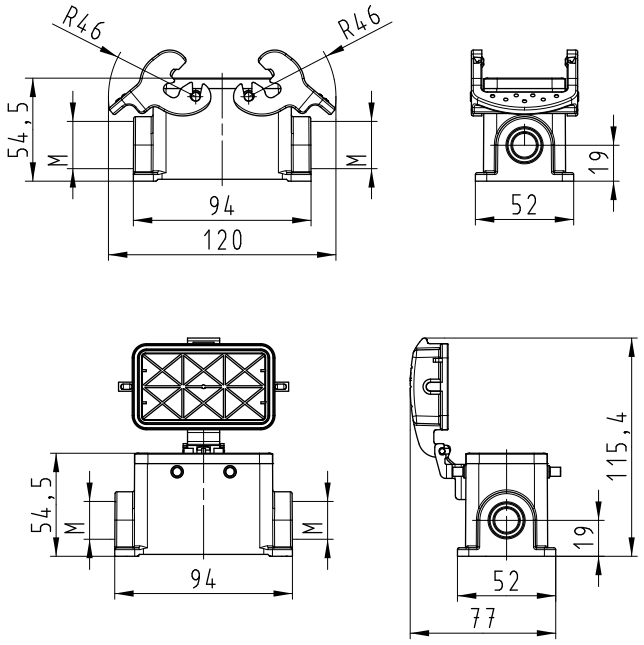

closed, 1 cable gland

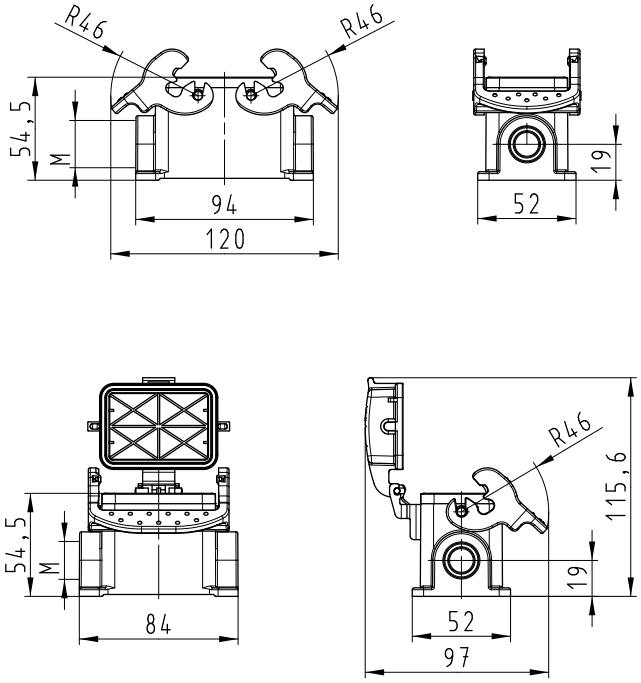

closed, 1 cable gland, bottom

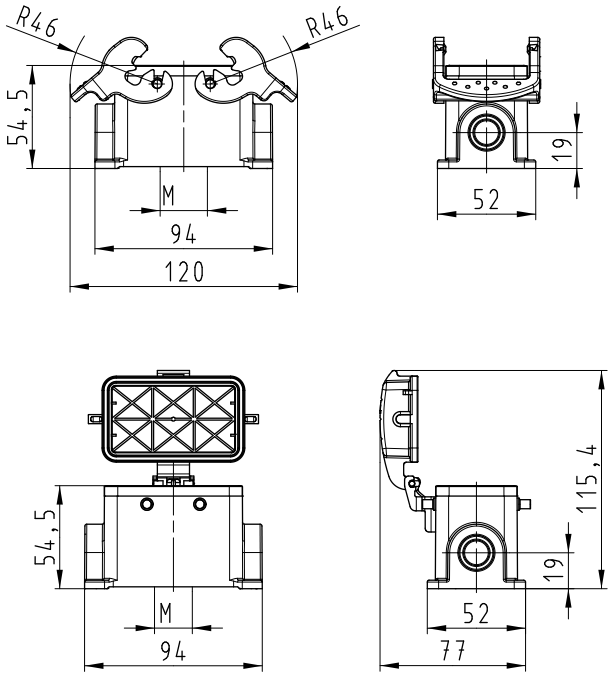

Bases, double locking lever
Size 10H, increased height design

Bases
Size 10H,
increased height design

closed M25
2 cable glands

without cover
with cover

Description	Type	M	Part No.	P.U.
Bases, size 10H	**Aluminum housing**			
Closed-bottom base				
2 cable glands, 2 x M25				
without cover				
with cable gland, IP54, ⇸|Ø|⇷ 7.5 – 19 mm	BAS GUT GB 10H M25 A0	25	73.330.1035.0	1
with threaded collar	BAS GUT GB 10H M25 A1	25	73.330.1035.1	1
with cover				
with cable gland, IP54, ⇸|Ø|⇷ 7.5 – 19 mm	BAS GUT GF 10H M25 A0	25	73.340.1035.0	1
with threaded collar	BAS GUT GF 10H M25 A1	25	73.340.1035.1	1
2 cable glands, 2 x M32				
without cover				
with cable gland, IP54, ⇸|Ø|⇷ 15 – 26.5 mm	BAS GUT GB 10H M32 A0	32	73.334.1035.0	1
with threaded collar	BAS GUT GB 10H M32 A1	32	73.334.1035.1	1
with cover				
with cable gland, IP54, ⇸|Ø|⇷ 15 – 26.5 mm	BAS GUT GF 10H M32 A0	32	73.344.1035.0	1
with threaded collar	BAS GUT GF 10H M32 A1	32	73.344.1035.1	1
1 cable gland, left, 1 x M25				
without cover				
with cable gland, IP54, ⇸|Ø|⇷ 7.5 – 19 mm	BAS GUT GC 10H M25 A0	25	73.331.1035.0	1
with threaded collar	BAS GUT GC 10H M25 A1	25	73.331.1035.1	1
with cover				
with cable gland, IP54, ⇸|Ø|⇷ 7.5 – 19 mm	BAS GUT GG 10H M25 A0	25	73.341.1035.0	1
with threaded collar	BAS GUT GG 10H M25 A1	25	73.341.1035.1	1
1 cable gland, left, 1 x M32				
without cover				
with cable gland, IP54, ⇸|Ø|⇷ 15 – 26.5 mm	BAS GUT GC 10H M32 A0	32	73.335.1035.0	1
with threaded collar	BAS GUT GC 10H M32 A1	32	73.335.1035.1	1
with cover				
with cable gland, IP54, ⇸|Ø|⇷ 15 – 26.5 mm	BAS GUT GG 10H M32 A0	32	73.345.1035.0	1
with threaded collar	BAS GUT GG 10H M32 A1	32	73.345.1035.1	1
1 cable gland, right, 1 x M25				
with cover				
with cable gland, IP54, ⇸|Ø|⇷ 7.5 – 19 mm	BAS GUT GH 10H M25 A0	25	73.342.1035.0	1
with threaded collar	BAS GUT GH 10H M25 A1	25	73.342.1035.1	1
1 cable gland, right, 1 x M32				
with cover				
with cable gland, IP54, ⇸|Ø|⇷ 15 – 26.5 mm	BAS GUT GH 10H M32 A0	32	73.346.1035.0	1
with threaded collar	BAS GUT GH 10H M32 A1	32	73.346.1035.1	1

Technical data	
Material	Die cast aluminum alloy
Surface	silicon-free
Locking levers	Handle: Polyamide, UL94-V0; stainless steel: V2A
Gasket	NBR
Degree of protection	
with latched locking levers	IP54
with appropriate cable glands	IP65
Temperature range	-40 … +120 °C

Description	Type	M	Part No.	P.U.
Accessories				
Cable gland IP68, plastic material, gray	Connection range 7 – 16 mm	25	Z5.507.1553.0	10
Cable gland IP68, nickel-plated brass	Connection range 11 – 18 mm	25	Z5.507.1521.0	10
Cable gland IP68, plastic material, gray	Connection range 10 – 21 mm	32	Z5.507.1753.0	10
Cable gland IP68, nickel-plated brass	Connection range 15 – 21 mm	32	Z5.507.1721.0	10
Contact inserts				
See the product matrix			Page 24–25	

Dimensions

Bases

closed, 2 cable glands

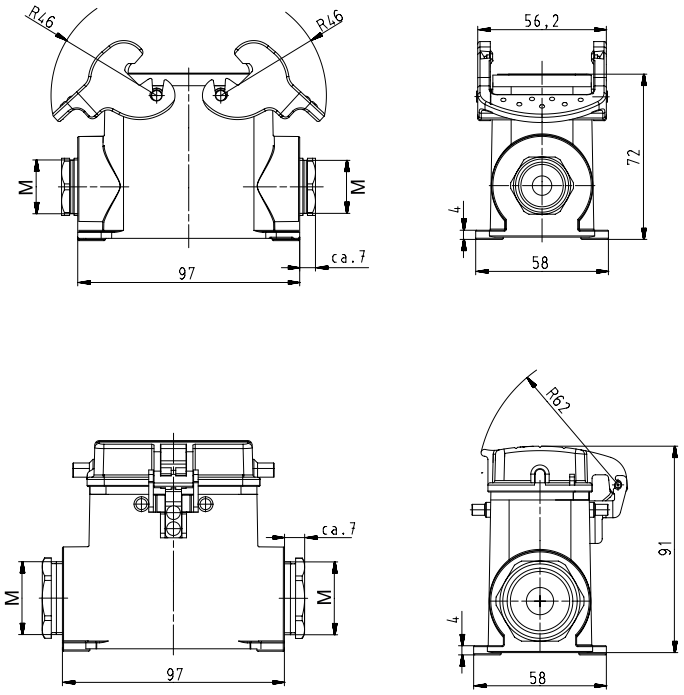

closed, 1 cable gland

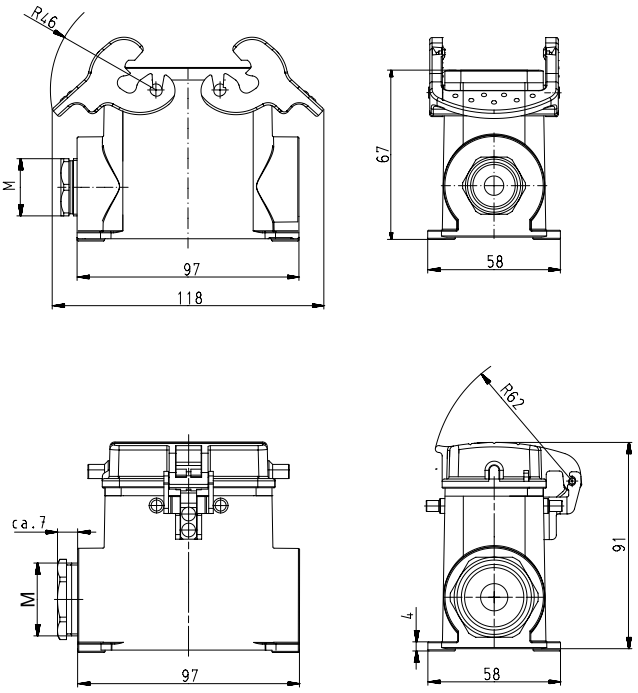

Hoods, single locking lever
Size 16

Hoods
Size 16

Lateral cable entry

Top cable entry

Multipole connectors for cable-to-cable couplings

Description	Type	M	Part No.	P.U.
Hoods, size 16	**Aluminum housing**			
Lateral cable entry M25				
with cable gland, IP54, →|Ø|← 7.5 – 19 mm	BAS GOT GG 16 M25 A0	25	71.350.1635.0	1
with threaded collar	BAS GOT GG 16 M25 A1	25	71.350.1635.1	1
Lateral cable entry M32				
with cable gland, IP54, →|Ø|← 15 – 26.5 mm	BAS GOT GG 16 M32 A0	32	71.353.1635.0	1
with threaded collar	BAS GOT GG 16 M32 A1	32	71.353.1635.1	1
Top cable entry M25				
with cable gland, IP54, →|Ø|← 7.5 – 19 mm	BAS GOT GI 16 M25 A0	25	71.352.1635.0	1
with threaded collar	BAS GOT GI 16 M25 A1	25	71.352.1635.1	1
Top cable entry M32				
with cable gland, IP54, →|Ø|← 15 – 26.5 mm	BAS GOT GI 16 M32 A0	32	71.354.1635.0	1
with threaded collar	BAS GOT GI 16 M32 A1	32	71.354.1635.1	1
Multipole connectors for cable-to-cable couplings M25				
with cable gland, IP54, →|Ø|← 7.5 – 19 mm	BAS GOT GI 16 M25 A0	25	71.352.1635.0	1
with cable gland, IP54, →|Ø|← 7.5 – 19 mm Locking levers and gasket	BAS GOT GL 16 M25 A0	25	71.372.1635.0	1
with threaded collar	BAS GOT GI 16 M25 A1	25	71.352.1635.1	1
with threaded collar Locking levers and gasket	BAS GOT GL 16 M25 A1	25	71.372.1635.1	1

Technical data	
Material	Die cast aluminum alloy
Surface	powder coated
Locking levers at Multipole connectors	Handle: Polyamide, UL94-V0; stainless steel: V2A
Gasket at Multipole connectors	NBR
Degree of protection	
with latched locking levers	IP54
with appropriate cable glands	IP65
Temperature range	-40 … +120 °C

Description	Type	M	Part No.	P.U.
Accessories				
Cable gland IP68, plastic material, gray	Connection range 7 – 16 mm	25	Z5.507.1553.0	10
Cable gland IP68, nickel-plated brass	Connection range 11 – 18 mm	25	Z5.507.1521.0	10
Cable gland IP68, plastic material, gray	Connection range 10 – 21 mm	32	Z5.507.1753.0	10
Cable gland IP68, nickel-plated brass	Connection range 15 – 21 mm	32	Z5.507.1721.0	10
Strain relief IP54, nickel-plated brass	Connection range 14 – 20 mm	25	Z5.507.9721.0	10
Strain relief IP54, nickel-plated brass	Connection range 19 – 29 mm	32	Z5.507.9821.0	10
Contact inserts				
See the product matrix			Page 24–25	

Dimensions

Hoods

Lateral cable entry

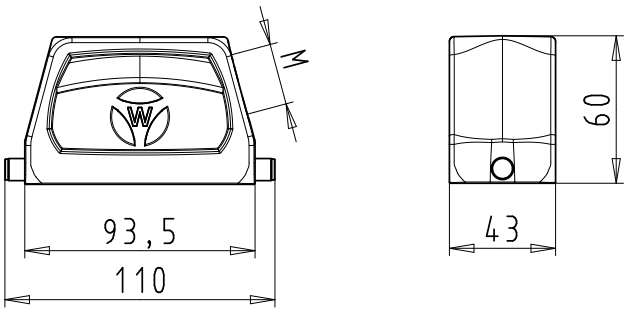

Top cable entry

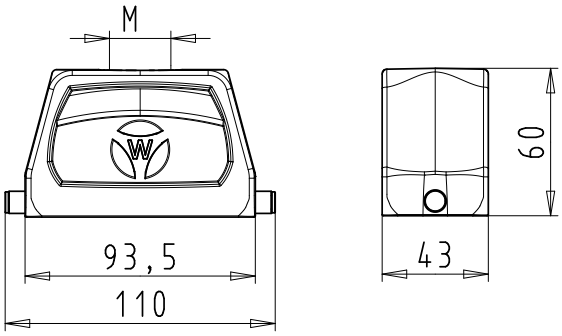

Multipole connectors for cable-to-cable couplings

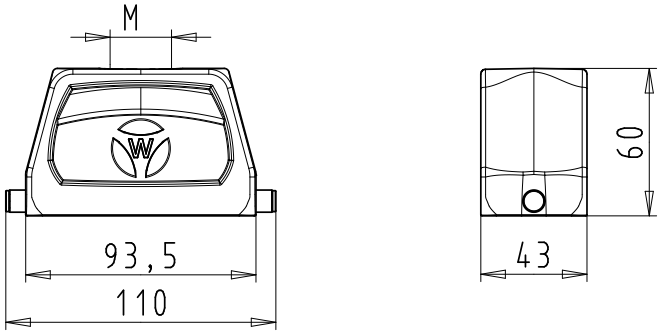

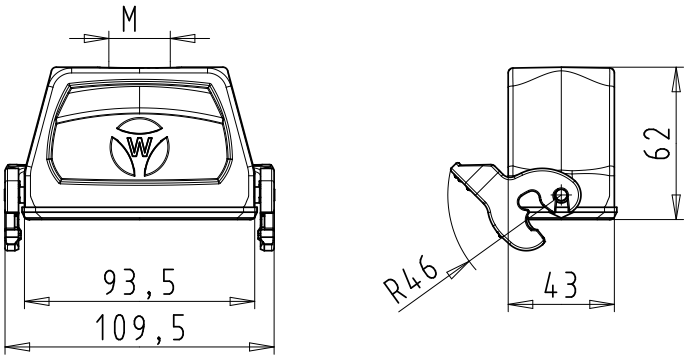

Hoods, single locking lever
Size 16H, increased height design

Hoods
Size 16H, increased height design

Lateral cable entry

Top cable entry

Multipole connectors for cable-to-cable couplings

Description	Type	M	Part No.	P.U.
Hoods, size 16H	**Aluminum housing**			
Lateral cable entry M25				
with cable gland, IP54, ➞IØI⇜ 7.5 – 19 mm	BAS GOT GG 16H M25 A0	25	76.350.4035.0	1
with threaded collar	BAS GOT GG 16H M25 A1	25	76.350.4035.1	1
Lateral cable entry M32				
with cable gland, IP54, ➞IØI⇜ 15 – 26.5 mm	BAS GOT GG 16H M32 A0	32	76.353.4035.0	1
with threaded collar	BAS GOT GG 16H M32 A1	32	76.353.4035.1	1
Lateral cable entry M40				
with cable gland, IP54, ➞IØI⇜ 19 – 27 mm	BAS GOT GG 16H M40 A0	40	76.360.4035.0	1
with threaded collar	BAS GOT GG 16H M40 A1	40	76.360.4035.1	1
Top cable entry M25				
with cable gland, IP54, ➞IØI⇜ 7.5 – 19 mm	BAS GOT GI 16H M25 A0	25	76.352.4035.0	1
with threaded collar	BAS GOT GI 16H M25 A1	25	76.352.4035.1	1
Top cable entry M32				
with cable gland, IP54, ➞IØI⇜ 15 – 26.5 mm	BAS GOT GI 16H M32 A0	32	76.354.4035.0	1
with threaded collar	BAS GOT GI 16H M32 A1	32	76.354.4035.1	1
Top cable entry M40				
with threaded collar	BAS GOT GI 16H M40 A1	40	76.362.4035.1	1
Multipole connectors for cable-to-cable couplings M32				
with cable gland, IP54, ➞IØI⇜ 15 – 26.5 mm	BAS GOT GI 16H M32 A0	32	76.354.4035.0	1
with cable gland, IP54, ➞IØI⇜ 15 – 26.5 mm Locking levers and gasket	BAS GOT GL 16H M32 A0	32	76.374.4035.0	1

Technical data	
Material	Die cast aluminum alloy
Surface	powder coated
Locking levers at Multipole connectors	Handle: Polyamide, UL94-V0; stainless steel: V2A
Gasket at Multipole connectors	NBR
Degree of protection	
with latched locking levers	IP54
with appropriate cable glands	IP65
Temperature range	-40 … +120 °C

Description	Type	M	Part No.	P.U.
Accessories				
Cable gland IP68, plastic material, gray	Connection range 7 – 16 mm	25	Z5.507.1553.0	10
Cable gland IP68, nickel-plated brass	Connection range 11 – 18 mm	25	Z5.507.1521.0	10
Cable gland IP68, plastic material, gray	Connection range 10 – 21 mm	32	Z5.507.1753.0	10
Cable gland IP68, nickel-plated brass	Connection range 15 – 21 mm	32	Z5.507.1721.0	10
Cable gland IP68, plastic material, gray	Connection range 16 – 28 mm	40	Z5.507.1953.0	1
Cable gland IP68, nickel-plated brass	Connection range 19 – 27 mm	40	Z5.507.1921.0	1
Strain relief IP54, nickel-plated brass	Connection range 14 – 20 mm	25	Z5.507.9721.0	10
Strain relief IP54, nickel-plated brass	Connection range 19 – 29 mm	25	Z5.507.9821.0	10
Contact inserts				
See the product matrix			Page 24-25	

Dimensions

Hoods

Lateral cable entry

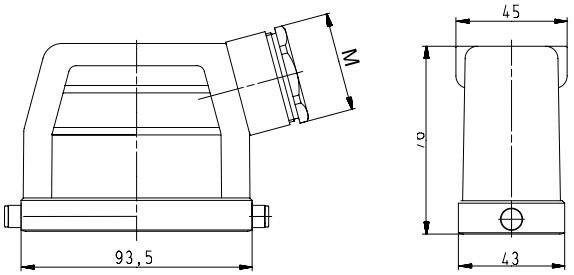

Top cable entry

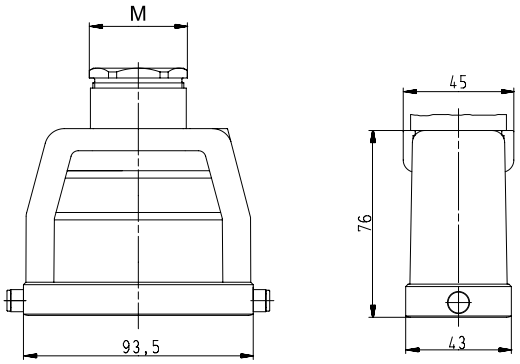

Multipole connectors for cable-to-cable couplings

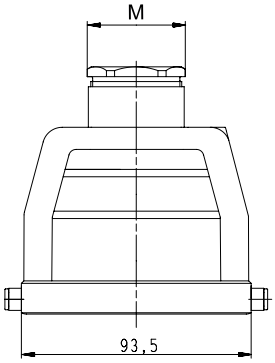

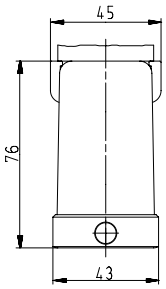

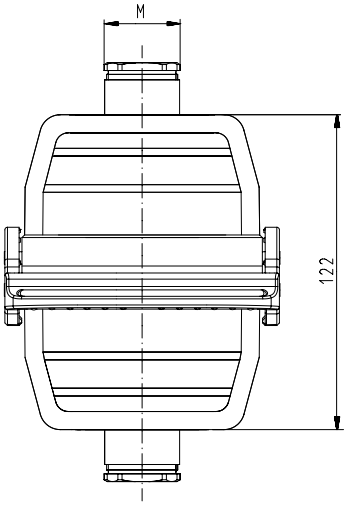

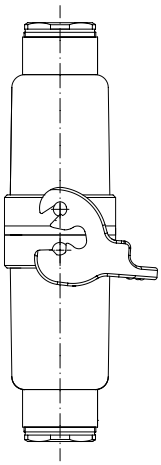

Bases, single locking lever
Size 16

Bases, Size 16

open

without cover
with cover

closed
1 cable gland

without cover
with cover

closed
1 cable gland, bottom

without cover
with cover

Description	Type	M	Part No.	P.U.
Bases, size 16	**Aluminum housing**			
Open-bottom base				
without cover	BAS GUT GK 16 A		71.320.1628.0	1
with cover	BAS GUT GP 16 A		71.325.1628.0	1
Closed-bottom base				
2 cable glands, 2 x M25				
without cover				
with cable gland, IP54, →|Ø|← 7.5– 19 mm	BAS GUT GL 16 M25 A0	25	71.330.1635.0	1
with threaded collar	BAS GUT GL 16 M25 A1	25	71.330.1635.1	1
with cover				
with cable gland, IP54, →|Ø|← 7.5– 19 mm	BAS GUT GR 16 M25 A0	25	71.340.1635.0	1
with threaded collar	BAS GUT GR 16 M25 A1	25	71.340.1635.1	1
1 cable gland, left, 1 x M25				
without cover				
with cable gland, IP54, →|Ø|← 7.5– 19 mm	BAS GUT GM 16 M25 A0	25	71.331.1635.0	1
with threaded collar	BAS GUT GM 16 M25 A1	25	71.331.1635.1	1
with cover				
with cable gland, IP54, →|Ø|← 7.5– 19 mm	BAS GUT GS 16 M25 A0	25	71.341.1635.0	1
with threaded collar	BAS GUT GS 16 M25 A1	25	71.341.1635.1	1
1 cable gland, right, 1 x M25				
with cover				
with cable gland, IP54, →|Ø|← 7.5– 19 mm	BAS GUT GT 16 M25 A0	25	71.342.1635.0	1
with threaded collar	BAS GUT GT 16 M25 A1	25	71.342.1635.1	1
1 cable gland, bottom, 1 x M25				
without cover				
with cable gland, IP54, →|Ø|← 7.5– 19 mm	BAS GUT GO 16 M25 A0	25	71.333.1635.0	1
with threaded collar	BAS GUT GO 16 M25 A1	25	71.333.1635.1	1
with cover				
with cable gland, IP54, →|Ø|← 7.5– 19 mm	BAS GUT GU 16 M25 A0	25	71.343.1635.0	1
with threaded collar	BAS GUT GU 16 M25 A1	25	71.343.1635.1	1

Technical data	
Material	Die cast aluminum alloy
Surface	powder coated
Locking levers	Handle: Polyamide, UL94-V0; stainless steel: V2A
Gasket	NBR
Degree of protection	
with latched locking levers	IP54
with appropriate cable glands	IP65
Temperature range	-40 … +120 °C

Description	Type	M	Part No.	P.U.
Accessories				
Cable gland IP68, plastic material, gray	Connection range 7 – 16 mm	25	Z5.507.1553.0	10
Cable gland IP68, nickel-plated brass	Connection range 11 – 18 mm	25	Z5.507.1521.0	10
Contact inserts				
See the product matrix			Page 24–25	

Dimensions

Bases

open

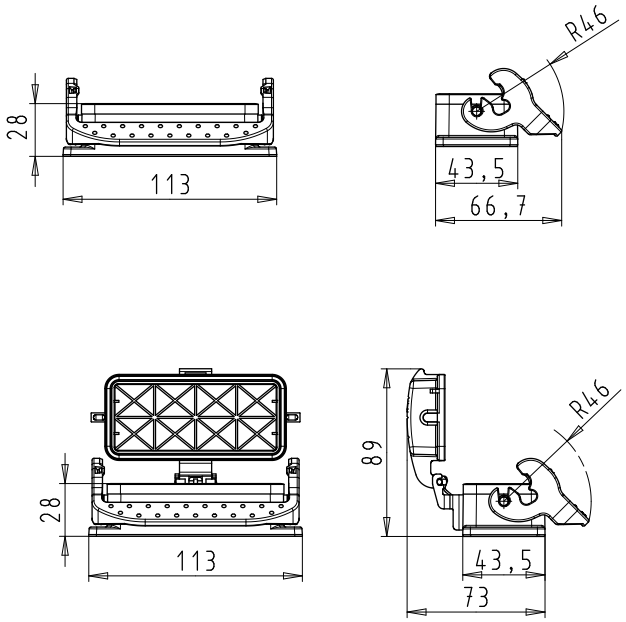

closed, 2 cable glands

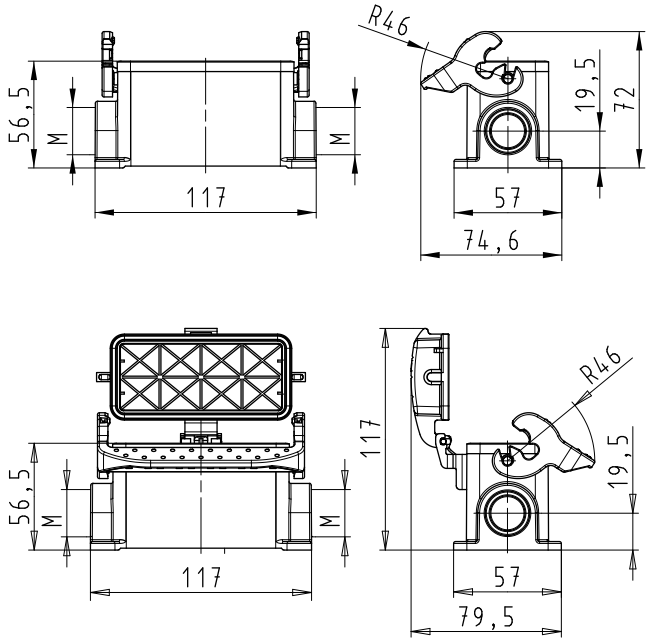

closed, 1 cable gland

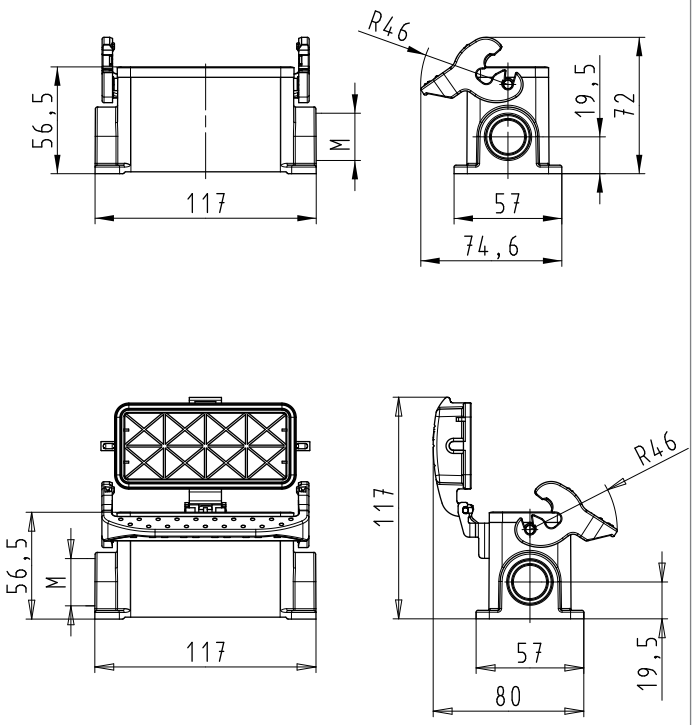

closed, 1 cable gland, bottom

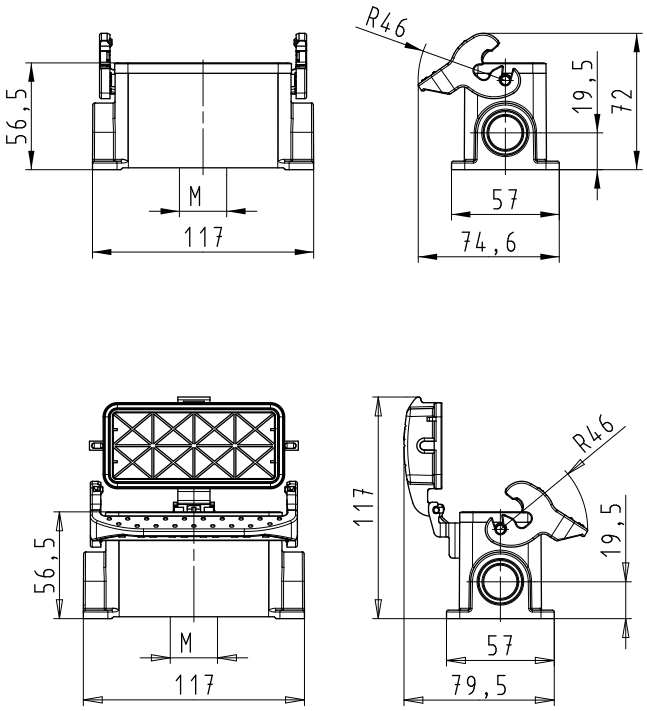

Bases, single locking lever
Size 16H, increased height design

Bases
Size 16H,
increased height design

closed M25
2 cable glands

without cover
with cover

closed M32
2 cable glands

without cover
with cover

closed M25
1 cable gland, bottom

without cover
with cover

Description	Type	M	Part No.	P.U.
Bases, size 16H	**Aluminum housing**			
Closed-bottom base				
2 cable glands, 2 x M25				
without cover				
with cable gland, IP54, ⇸|Ø|⇷ 7.5– 19 mm	BAS GUT GL 16H M25 A0	25	76.330.4035.0	1
with threaded collar	BAS GUT GL 16H M25 A1	25	76.330.4035.1	1
with cover				
with cable gland, IP54, ⇸|Ø|⇷ 7.5– 19 mm	BAS GUT GR 16H M25 A0	25	76.340.4035.0	1
with threaded collar	BAS GUT GR 16H M25 A1	25	76.340.4035.1	1
2 cable glands, 2 x M32				
without cover				
with cable gland, IP54, ⇸|Ø|⇷ 15 – 26.5 mm	BAS GUT GL 16H M32 A0	32	76.334.4035.0	1
with threaded collar	BAS GUT GL 16H M32 A1	32	76.334.4035.1	1
with cover				
with cable gland, IP54, ⇸|Ø|⇷ 15 – 26.5 mm	BAS GUT GR 16H M32 A0	32	76.344.4035.0	1
with threaded collar	BAS GUT GR 16H M32 A1	32	76.344.4035.1	1
1 cable gland, left, 1 x M25				
without cover				
with cable gland, IP54, ⇸|Ø|⇷ 7.5– 19 mm	BAS GUT GM 16H M25 A0	25	76.331.4035.0	1
with threaded collar	BAS GUT GM 16H M25 A1	25	76.331.4035.1	1
with cover				
with cable gland, IP54, ⇸|Ø|⇷ 7.5– 19 mm	BAS GUT GS 16H M25 A0	25	76.341.4035.0	1
with threaded collar	BAS GUT GS 16H M25 A1	25	76.341.4035.1	1
1 cable gland, left, 1 x M32				
without cover				
with cable gland, IP54, ⇸|Ø|⇷ 15 – 26.5 mm	BAS GUT GM 16H M32 A0	32	76.335.4035.0	1
with threaded collar	BAS GUT GM 16H M32 A1	32	76.335.4035.1	1
with cover				
with cable gland, IP54, ⇸|Ø|⇷ 15 – 26.5 mm	BAS GUT GS 16H M32 A0	32	76.345.4035.0	1
with threaded collar	BAS GUT GS 16H M32 A1	32	76.345.4035.1	1
1 cable gland, right, 1 x M25				
with cover				
with cable gland, IP54, ⇸|Ø|⇷ 7.5– 19 mm	BAS GUT GT 16H M25 A0	25	76.342.4035.0	1
with threaded collar	BAS GUT GT 16H M25 A1	25	76.342.4035.1	1
1 cable gland, right, 1 x M32				
with cover				
with cable gland, IP54, ⇸|Ø|⇷ 15 – 26.5 mm	BAS GUT GT 16H M32 A0	32	76.346.4035.0	1
with threaded collar	BAS GUT GT 16H M32 A1	32	76.346.4035.1	1
1 cable gland, bottom, 1 x M25				
without cover				
with cable gland, IP54, ⇸|Ø|⇷ 7.5– 19 mm	BAS GUT GO 16H M25 A0	25	76.333.4035.0	1
with threaded collar	BAS GUT GO 16H M25 A1	25	76.333.4035.1	1
with cover				
with cable gland, IP54, ⇸|Ø|⇷ 7.5– 19 mm	BAS GUT GU 16H M25 A0	25	76.343.4035.0	1
with threaded collar	BAS GUT GU 16H M25 A1	25	76.343.4035.1	1
1 cable gland, bottom, 1 x M32				
without cover				
with cable gland, IP54, ⇸|Ø|⇷ 15 – 26.5 mm	BAS GUT GO 16H M32 A0	32	76.337.4035.0	1
with threaded collar	BAS GUT GO 16H M32 A1	32	76.337.4035.1	1
with cover				
with cable gland, IP54, ⇸|Ø|⇷ 15 – 26.5 mm	BAS GUT GU 16H M32 A0	32	76.347.4035.0	1
with threaded collar	BAS GUT GU 16H M32 A1	32	76.347.4035.1	1

Technical data	
Material	Die cast aluminum alloy
Surface	powder coated
Locking levers	Handle: Polyamide, UL94-V0; stainless steel: V2A
Gasket	NBR
Degree of protection	
with latched locking levers	IP54
with appropriate cable glands	IP65
Temperature range	-40 … +120 °C

Description	Type	M	Part No.	P.U.
Accessories				
Cable gland IP68, plastic material, gray	Connection range 7 – 16 mm	25	Z5.507.1553.0	10
Cable gland IP68, nickel-plated brass	Connection range 11 – 18 mm	25	Z5.507.1521.0	10
Cable gland IP68, plastic material, gray	Connection range 10 – 21 mm	32	Z5.507.1753.0	10
Cable gland IP68, nickel-plated brass	Connection range 15 – 21 mm	32	Z5.507.1721.0	10
Contact inserts				
See the product matrix			Page 24–25	

All Bases on this page are also available in M40 design.
Part numbers available on request.

Dimensions

Bases

closed, 2 cable glands

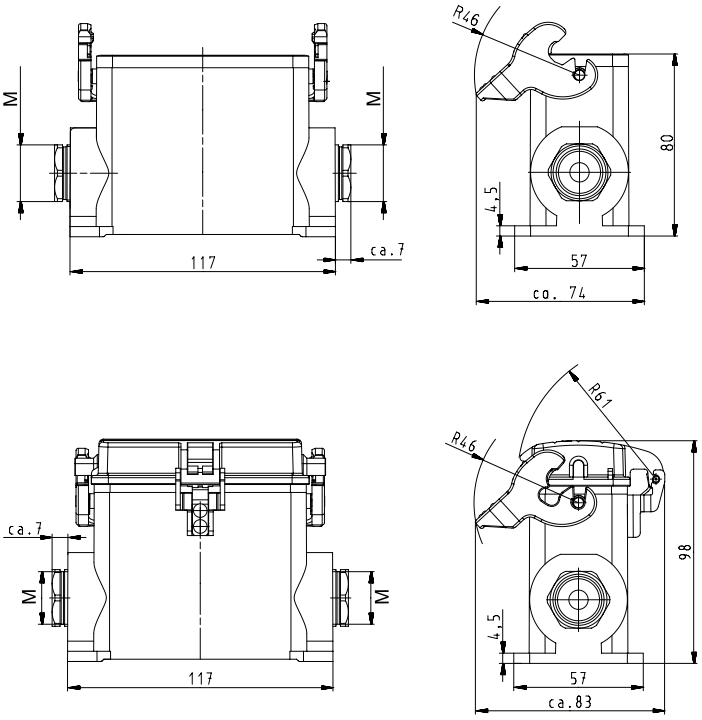

closed, 1 cable gland

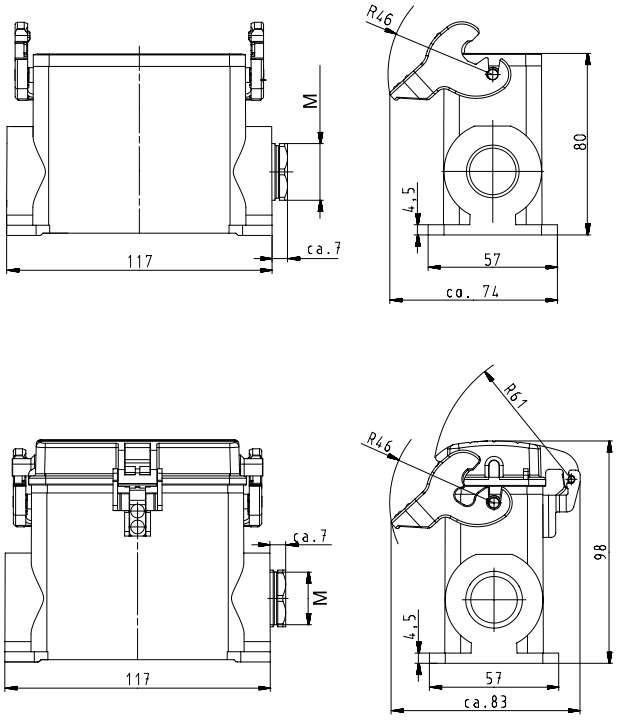

closed, 1 cable gland, bottom

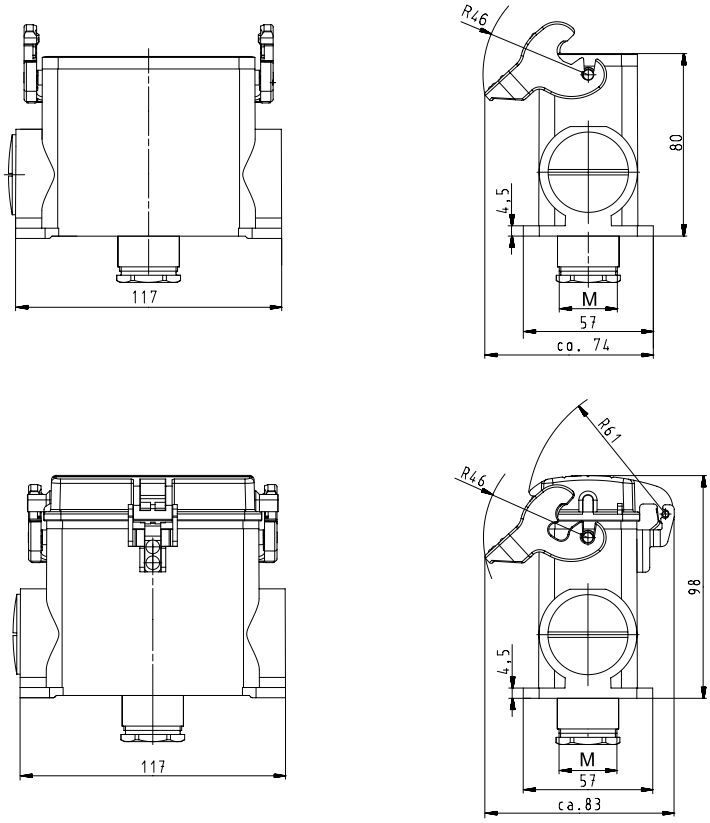

Hoods, double locking lever
Size 16

Hoods
Size 16

Lateral cable entry

Top cable entry

Description	Type	M	Part No.	P.U.
Hoods, size 16	**Aluminum housing**			
Lateral cable entry M25				
with cable gland, IP54, ➞IØ⇐ 7.5 – 19 mm	BAS GOT GA 16 M25 A0	25	70.350.1635.0	1
with threaded collar	BAS GOT GA 16 M25 A1	25	70.350.1635.1	1
Lateral cable entry M32				
with cable gland, IP54, ➞IØ⇐ 15 – 26.5 mm	BAS GOT GA 16 M32 A0	32	70.353.1635.0	1
with threaded collar	BAS GOT GA 16 M32 A1	32	70.353.1635.1	1
Top cable entry M25				
with cable gland, IP54, ➞IØ⇐ 7.5 – 19 mm	BAS GOT GC 16 M25 A0	25	70.352.1635.0	1
with threaded collar	BAS GOT GC 16 M25 A1	25	70.352.1635.1	1
Top cable entry M32				
with cable gland, IP54, ➞IØ⇐ 15 – 26.5 mm	BAS GOT GC 16 M32 A0	32	70.354.1635.0	1
with threaded collar	BAS GOT GC 16 M32 A1	32	70.354.1635.1	1

Technical data	
Material	Die cast aluminum alloy
Surface	powder coated
Locking levers	-
Gasket	-
Degree of protection	
with latched locking levers	IP54
with appropriate cable glands	IP65
Temperature range	-40 … +120 °C

Description	Type	M	Part No.	P.U.
Accessories				
Cable gland IP68, plastic material, gray	Connection range 7 – 16 mm	25	Z5.507.1553.0	10
Cable gland IP68, nickel-plated brass	Connection range 11 – 18 mm	25	Z5.507.1521.0	10
Cable gland IP68, plastic material, gray	Connection range 10 – 21 mm	32	Z5.507.1753.0	10
Cable gland IP68, nickel-plated brass	Connection range 15 – 21 mm	32	Z5.507.1721.0	10
Strain relief IP54, nickel-plated brass	Connection range 14 – 20 mm	25	Z5.507.9721.0	10
Strain relief IP54, nickel-plated brass	Connection range 19 – 29 mm	32	Z5.507.9821.0	10
Contact inserts				
See the product matrix			Page 24–25	

Dimensions

Hoods

500 V Size 16
Lateral cable entry

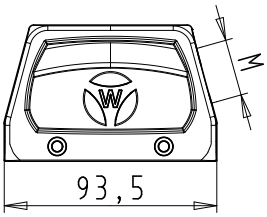

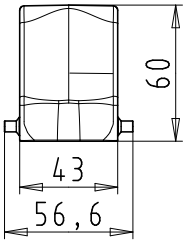

500 V Size 16
Top cable entry

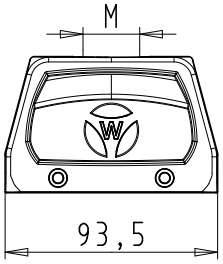

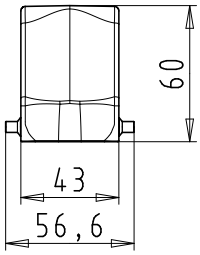

Hoods, double locking lever with Locking levers, Size 16

Hoods Size 16

Lateral cable entry

Top cable entry

Multipole connectors for cable-to-cable couplings

Description	Type	M	Part No.	P.U.
Hoods, size 16	**Aluminum housing**			
Lateral cable entry M25				
with cable gland, IP54, →|Ø|← 7.5 – 19 mm	BAS GOT GD 16 M25 A0	25	70.355.1635.0	1
with threaded collar	BAS GOT GD 16 M25 A1	25	70.355.1635.1	1
Lateral cable entry M32				
with cable gland, IP54, →|Ø|← 15 – 26.5 mm	BAS GOT GD 16 M32 A0	32	70.358.1635.0	1
with threaded collar	BAS GOT GD 16 M32 A1	32	70.358.1635.1	1
Top cable entry M25				
with cable gland, IP54, →|Ø|← 7.5 – 19 mm	BAS GOT GF16 M25 A0	25	70.357.1635.0	1
with threaded collar	BAS GOT GF 16 M25 A1	25	70.357.1635.1	1
Top cable entry M32				
with cable gland, IP54, →|Ø|← 15 – 26.5 mm	BAS GOT GF 16 M32 A0	32	70.359.1635.0	1
with threaded collar	BAS GOT GF 16 M32 A1	32	70.359.1635.1	1
Multipole connectors for cable-to-cable couplings M25				
with cable gland, IP54, →|Ø|← 7.5 – 19 mm	BAS GOT GC 16 M25 A0	25	70.352.1635.0	1
with cable gland, IP54, →|Ø|← 7.5 – 19 mm Locking levers and gasket	BAS GOT GK 16 M25 A0	25	70.372.1635.0	1
with threaded collar	BAS GOT GC 16 M25 A1	25	70.352.1635.1	1
with threaded collar, locking levers and gasket	BAS GOT GK 16 M25 A1	25	70.372.1635.1	1

Technical data	
Material	Die cast aluminum alloy
Surface	powder coated
Locking levers	Handle: Polyamide, UL94-V0; stainless steel: V2A
Gasket for Multipole connectors	NBR
Degree of protection	
with latched locking levers	IP54
with appropriate cable glands	IP65
Temperature range	-40 … +120 °C

Description	Type	M	Part No.	P.U.
Accessories				
Cable gland IP68, plastic material, gray	Connection range 7 – 16 mm	25	Z5.507.1553.0	10
Cable gland IP68, nickel-plated brass	Connection range 11 – 18 mm	25	Z5.507.1521.0	10
Cable gland IP68, plastic material, gray	Connection range 10 – 21 mm	32	Z5.507.1753.0	10
Cable gland IP68, nickel-plated brass	Connection range 15 – 21 mm	32	Z5.507.1721.0	10
Strain relief IP54, nickel-plated brass	Connection range 14 – 20 mm	25	Z5.507.9721.0	10
Strain relief IP54, nickel-plated brass	Connection range 19 – 29 mm	32	Z5.507.9821.0	10
Contact inserts				
See the product matrix			Page 24–25	

Dimensions

Hoods with Locking levers

Lateral cable entry

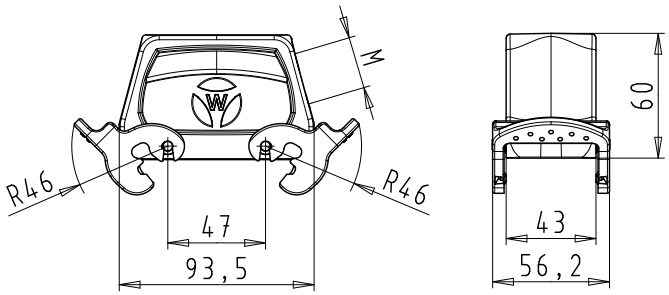

Top cable entry

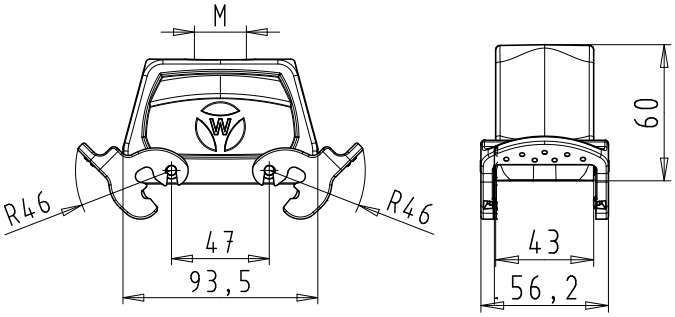

Multipole connectors for cable-to-cable couplings

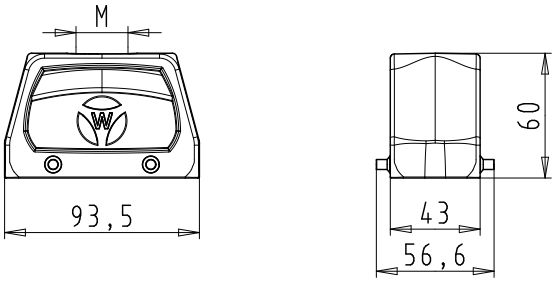

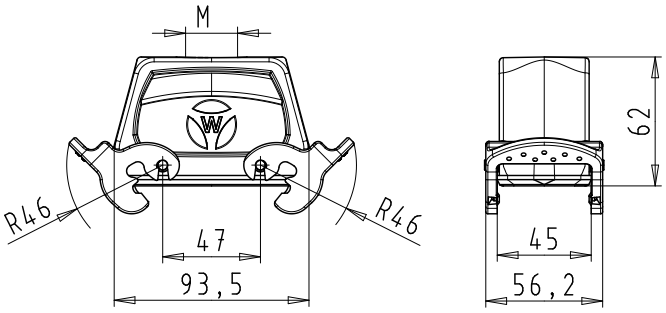

Hoods, double locking lever
Size 16H, increased height design

Hoods
Size 16H, increased height design

Lateral cable entry

Top cable entry

Multipole connectors for cable-to-cable couplings

Description	Type	M	Part No.	P.U.
Hoods, size 16H	**Aluminum housing**			
Lateral cable entry M25				
with cable gland, IP54, ➞IØ⇐ 7.5 – 19 mm	BAS GOT GA 16H M25 A0	25	73.350.4035.0	1
with threaded collar	BAS GOT GA 16H M25 A1	25	73.350.4035.1	1
Lateral cable entry M32				
with cable gland, IP54, ➞IØ⇐ 15 – 26.5 mm	BAS GOT GA 16H M32 A0	32	73.353.4035.0	1
with threaded collar	BAS GOT GA 16H M32 A1	32	73.353.4035.1	1
Lateral cable entry M40				
with cable gland, IP54, ➞IØ⇐ 23 – 32 mm	BAS GOT GA 16H M40 A0	40	73.360.4035.0	1
with threaded collar	BAS GOT GA 16H M40 A1	40	73.360.4035.1	1
Top cable entry M25				
with cable gland, IP54, ➞IØ⇐ 7.5 – 19 mm	BAS GOT GC 16H M25 A0	25	73.352.4035.0	1
with threaded collar	BAS GOT GC 16H M25 A1	25	73.352.4035.1	1
Top cable entry M32				
with cable gland, IP54, ➞IØ⇐ 15 – 26.5 mm	BAS GOT GC 16H M32 A0	32	73.354.4035.0	1
with threaded collar	BAS GOT GC 16H M32 A1	32	73.354.4035.1	1
Top cable entry M40				
with cable gland, IP54, ➞IØ⇐ 23 – 32 mm	BAS GOT GC 16H M40 A0	40	73.362.4035.0	1
with threaded collar	BAS GOT GC 16H M40 A1	40	73.362.4035.1	1
Multipole connectors for cable-to-cable couplings M32				
with threaded collar, locking levers and gasket	BAS GOT GK 16H M32 A1	32	73.374.4035.1	1

Technical data	
Material	Die cast aluminum alloy
Surface	powder coated
Locking levers	-
Gasket	-
Degree of protection	
with latched locking levers	IP54
with appropriate cable glands	IP65
Temperature range	-40 … +120 °C

Description	Type	M	Part No.	P.U.
Accessories				
Cable gland IP68, plastic material, gray	Connection range 7 – 16 mm	25	Z5.507.1553.0	10
Cable gland IP68, nickel-plated brass	Connection range 11 – 18 mm	25	Z5.507.1521.0	10
Cable gland IP68, plastic material, gray	Connection range 10 – 21 mm	32	Z5.507.1753.0	10
Cable gland IP68, nickel-plated brass	Connection range 15 – 21 mm	32	Z5.507.1721.0	10
Cable gland IP68, plastic material, gray	Connection range 16 – 28 mm	40	Z5.507.1953.0	1
Cable gland IP68, nickel-plated brass	Connection range 19 – 27 mm	40	Z5.507.1921.0	1
Strain relief IP54, nickel-plated brass	Connection range 14 – 20 mm	25	Z5.507.9721.0	10
Strain relief IP54, nickel-plated brass	Connection range 19 – 29 mm	32	Z5.507.9821.0	10
Contact inserts				
See the product matrix			Page 24–25	

Dimensions

Hoods

Lateral cable entry

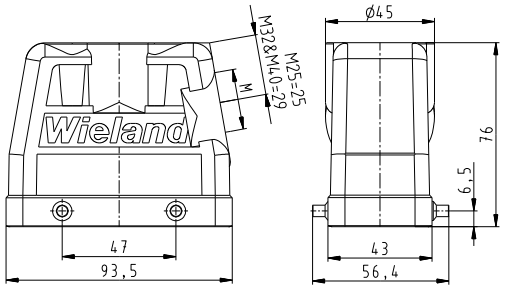

Top cable entry

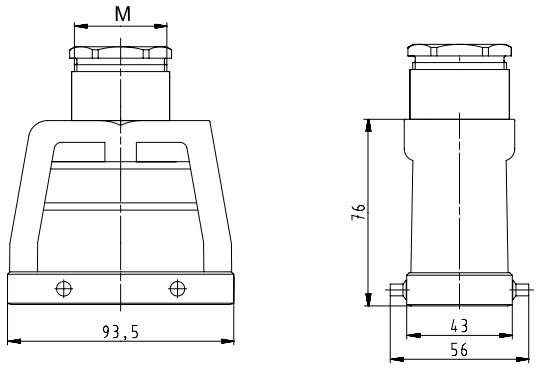

Multipole connectors for cable-to-cable couplings

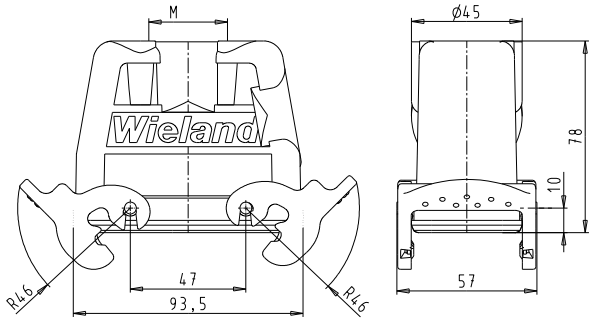

Hoods, double locking lever with Locking levers, Size 16H, increased height design

Hoods
Size 16H, increased height design

Lateral cable entry

Top cable entry

Description	Type	M	Part No.	P.U.
Hoods, size 16H	**Aluminum housing**			
Lateral cable entry M25				
with cable gland, IP54, ⇸IØI⇷ 7.5 – 19 mm	BAS GOT GD 16H M25 A0	25	73.355.4035.0	1
with threaded collar	BAS GOT GD 16H M25 A1	25	73.355.4035.1	1
Lateral cable entry M32				
with cable gland, IP54, ⇸IØI⇷ 15 – 26.5 mm	BAS GOT GD 16H M32 A0	32	73.358.4035.0	1
with threaded collar	BAS GOT GD 16H M32 A1	32	73.358.4035.1	1
Top cable entry M25				
with cable gland, IP54, ⇸IØI⇷ 7.5 – 19 mm	BAS GOT GF 16H M25 A0	25	73.357.4035.0	1
with threaded collar	BAS GOT GF 16H M25 A1	25	73.357.4035.1	1
Top cable entry M32				
with cable gland, IP54, ⇸IØI⇷ 15 – 26.5 mm	BAS GOT GF 16H M32 A0	32	73.359.4035.0	1
with threaded collar	BAS GOT GF 16H M32 A1	32	73.359.4035.1	1

Technical data	
Material metal/plastic	Die cast aluminum alloy
Surface	powder coated
Locking levers	Handle: Polyamide, UL94-V0; stainless steel: V2A
Gasket	-
Degree of protection	
with latched locking levers	IP54
with appropriate cable glands	IP65
Temperature range	-40 … +120 °C

Description	Type	M	Part No.	P.U.
Accessories				
Cable gland IP68, plastic material, gray	Connection range 7 – 16 mm	25	Z5.507.1553.0	10
Cable gland IP68, nickel-plated brass	Connection range 11 – 18 mm	25	Z5.507.1521.0	10
Cable gland IP68, plastic material, gray	Connection range 10 – 21 mm	32	Z5.507.1753.0	10
Cable gland IP68, nickel-plated brass	Connection range 15 – 21 mm	32	Z5.507.1721.0	10
Strain relief IP54, nickel-plated brass	Connection range 14 – 20 mm	25	Z5.507.9721.0	10
Strain relief IP54, nickel-plated brass	Connection range 19 – 29 mm	32	Z5.507.9821.0	10
Contact inserts				
See the product matrix			Page 24–25	

Dimensions

Hoods

Lateral cable entry

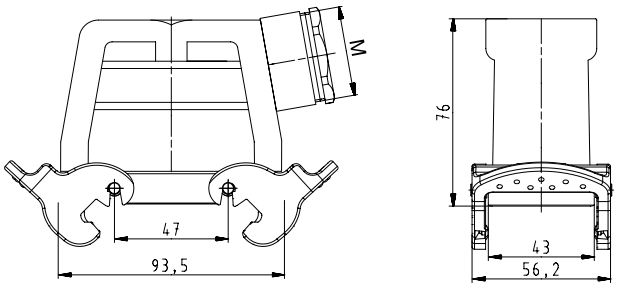

Top cable entry

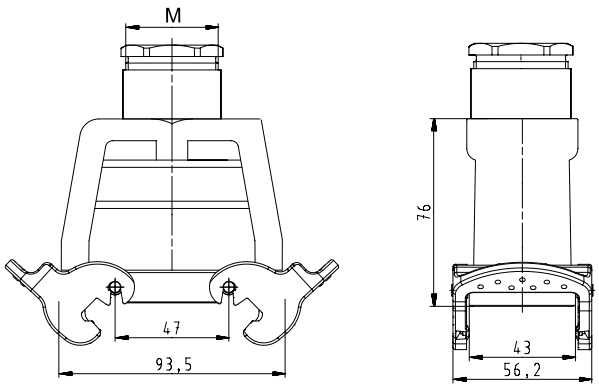

Hoods, double locking lever
Size 16XL

Hoods
Size 16XL

Lateral cable entry
with intermediate support

Description	Type	M	Part No.	P.U.
Hoods, size 16XL	**Aluminum housing**			
Lateral cable entry M40				
with intermediate support	POW GOT GA 16 M40 69 A2	40	72.250.1635.2	1

Technical data	
Material	Die cast aluminum alloy
Surface	powder coated
Locking levers	-
Gasket	-
Degree of protection	
with latched locking levers	-
with appropriate cable glands	IP65
Temperature range	-40 … +120 °C

Description	Type	M	Part No.	P.U.
Accessories				
Cable gland IP68, plastic material, gray	Connection range 16 – 28 mm	40	Z5.507.1953.0	1
Cable gland IP68, nickel-plated brass	Connection range 19 – 27 mm	40	Z5.507.1921.0	1
Contact inserts				
See the product matrix			Page 24–25	

Dimensions

Lateral cable entry

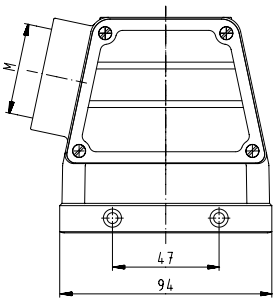

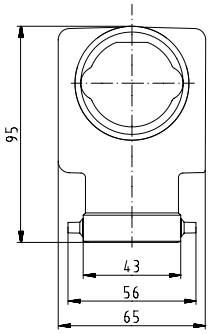

Bases, double locking lever
Size 16

Bases, Size 16

open
without cover
with cover

closed
1 cable gland, lateral
without cover
with cover

closed
1 cable gland, bottom
without cover
with cover

Description	Type	M	Part No.	P.U.
Bases, size 16	**Aluminum housing**			
Open-bottom base				
without cover	BAS GUT GA 16 A		70.320.1628.0	1
with cover	BAS GUT GE 16 A		70.325.1628.0	1
Closed-bottom base				
2 cable glands, 2 x M25				
without cover				
with cable gland, IP54, →|Ø|← 7.5 – 19 mm	BAS GUT GB 16 M25 A0	25	70.330.1635.0	1
with threaded collar	BAS GUT GB 16 M25 A1	25	70.330.1635.1	1
with cover				
with cable gland, IP54, →|Ø|← 7.5 – 19 mm	BAS GUT GF 16 M25 A0	25	70.340.1635.0	1
with threaded collar	BAS GUT GF 16 M25 A1	25	70.340.1635.1	1
1 cable gland, left, 1 x M25				
without cover				
with cable gland, IP54, →|Ø|← 7.5 – 19 mm	BAS GUT GC 16 M25 A0	25	70.331.1635.0	1
with threaded collar	BAS GUT GC 16 M25 A1	25	70.331.1635.1	1
with cover				
with cable gland, IP54, →|Ø|← 7.5 – 19 mm	BAS GUT GG 16 M25 A0	25	70.341.1635.0	1
with threaded collar	BAS GUT GG 16 M25 A1	25	70.341.1635.1	1
1 cable gland, right, 1 x M25				
with cover				
with cable gland, IP54, →|Ø|← 7.5 – 19 mm	BAS GUT GH 16 M25 A0	25	70.342.1635.0	1
with threaded collar	BAS GUT GH 16 M25 A1	25	70.342.1635.1	1
1 cable gland, bottom, 1 x M25				
without cover				
with cable gland, IP54, →|Ø|← 7.5 – 19 mm	BAS GUT GD 16 M25 A0	25	70.333.1635.0	1
with threaded collar	BAS GUT GD 16 M25 A1	25	70.333.1635.1	1
with cover				
with cable gland, IP54, →|Ø|← 7.5 – 19 mm	BAS GUT GI 16 M25 A0	25	70.343.1635.0	1
with threaded collar	BAS GUT GI 16 M25 A1	25	70.343.1635.1	1

Technical data	
Material	Die cast aluminum alloy
Surface	powder coated
Locking levers	Handle: Polyamide, UL94-V0; stainless steel: V2A
Gasket	NBR
Degree of protection	
with latched locking levers	IP54
with appropriate cable glands	IP65
Temperature range	-40 … +120 °C

Description	Type	M	Part No.	P.U.
Accessories				
Cable gland IP68, plastic material, gray	Connection range 7 – 16 mm	25	Z5.507.1553.0	10
Cable gland IP68, nickel-plated brass	Connection range 11 – 18 mm	25	Z5.507.1521.0	10
Contact inserts				
See the product matrix			Page 24–25	

Dimensions

Bases

open

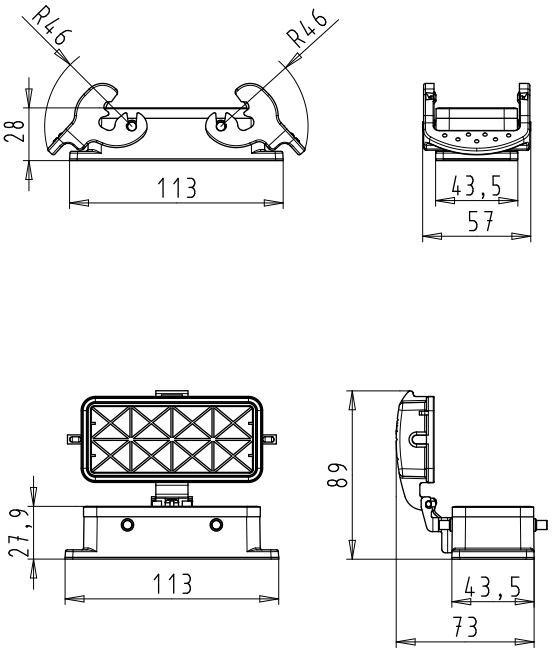

closed, 2 cable glands

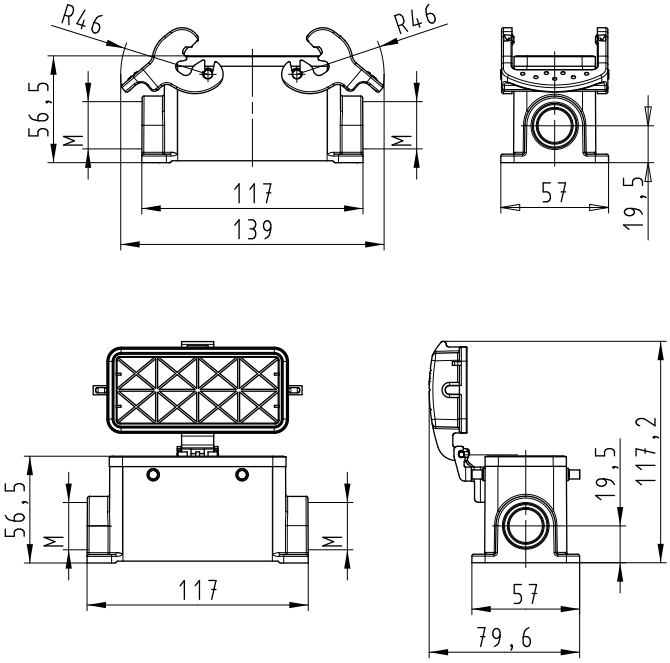

closed, 1 cable gland

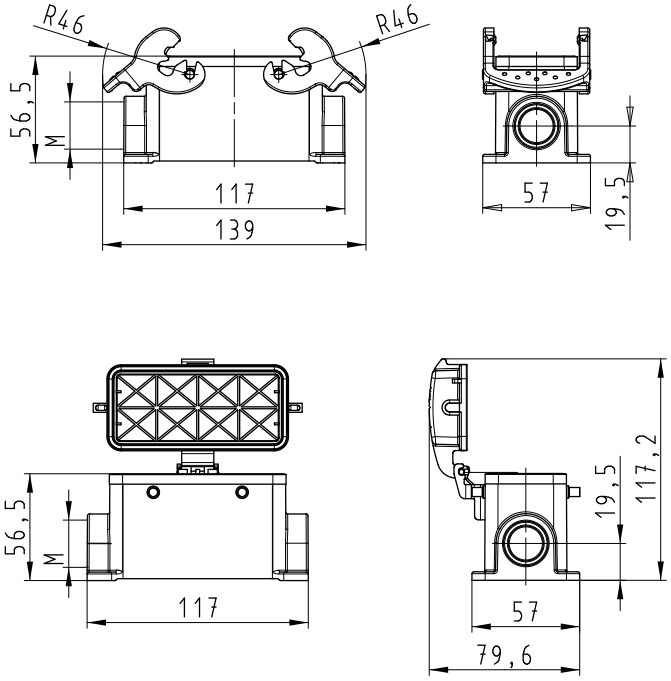

closed, 1 cable gland, bottom

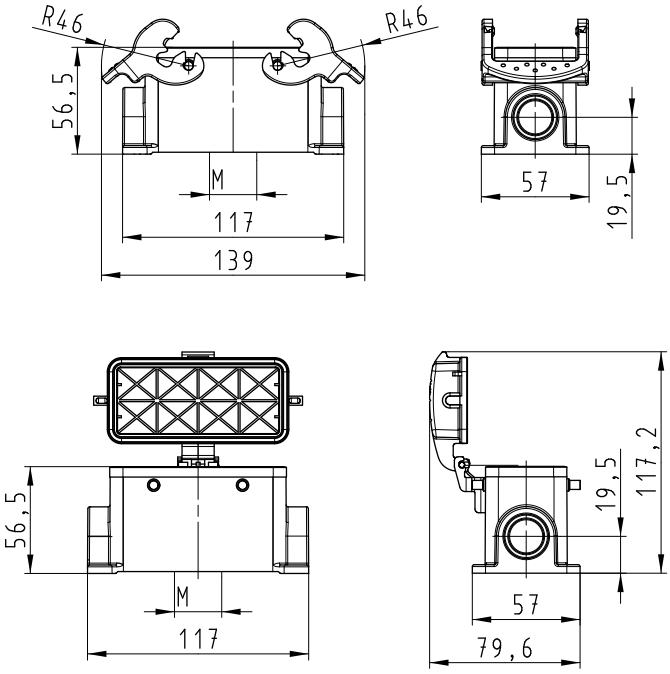

Bases, double locking lever
Size 16H, increased height design

Bases
Size 16H,
increased height design

closed M25
2 cable glands

without cover
with cover

closed M32
2 cable glands

without cover
with cover

closed M25
1 cable gland, bottom

without cover
with cover

Description	Type	M	Part No.	P.U.
Bases, size 16H	**Aluminum housing**			
Closed-bottom base				
2 cable glands, 2 x M25				
without cover				
with cable gland, IP54, ➞|Ø|⇜ 7.5 – 19 mm	BAS GUT GB 16H M25 A0	25	73.330.4035.0	1
with threaded collar	BAS GUT GB 16H M25 A1	25	73.330.4035.1	1
with cover				
with cable gland, IP54, ➞|Ø|⇜ 7.5 – 19 mm	BAS GUT GF 16H M25 A0	25	73.340.4035.0	1
with threaded collar	BAS GUT GF 16H M25 A1	25	73.340.4035.1	1
2 cable glands, 2 x M32				
without cover				
with cable gland, IP54, ➞|Ø|⇜ 15 – 26.5 mm	BAS GUT GB 16H M32 A0	32	73.334.4035.0	1
with threaded collar	BAS GUT GB 16H M32 A1	32	73.334.4035.1	1
with cover				
with cable gland, IP54, ➞|Ø|⇜ 15 – 26.5 mm	BAS GUT GF 16H M32 A0	32	73.344.4035.0	1
with threaded collar	BAS GUT GF 16H M32 A1	32	73.344.4035.1	1
2 cable glands, 2 x M40				
without cover				
with threaded collar	BAS GUT GB 16H M40 A1	40	73.338.4035.1	1
1 cable gland, left, 1 x M25				
without cover				
with cable gland, IP54, ➞|Ø|⇜ 7.5 – 19 mm	BAS GUT GC 16H M25 A0	25	73.331.4035.0	1
with threaded collar	BAS GUT GC 16H M25 A1	25	73.331.4035.1	1
with cover				
with cable gland, IP54, ➞|Ø|⇜ 7.5 – 19 mm	BAS GUT GG 16H M25 A0	25	73.341.4035.0	1
with threaded collar	BAS GUT GG 16H M25 A1	25	73.341.4035.1	1
1 cable gland, left, 1 x M32				
without cover				
with cable gland, IP54, ➞|Ø|⇜ 15 – 26.5 mm	BAS GUT GC 16H M32 A0	32	73.335.4035.0	1
with threaded collar	BAS GUT GC 16H M32 A1	32	73.335.4035.1	1
with cover				
with cable gland, IP54, ➞|Ø|⇜ 15 – 26.5 mm	BAS GUT GG 16H M32 A0	32	73.345.4035.0	1
with threaded collar	BAS GUT GG 16H M32 A1	32	73.345.4035.1	1
1 cable gland, left, 1 x M40				
without cover				
with cable gland, IP54, ➞|Ø|⇜ 19 – 27 mm	BAS GUT GC 16H M40 A0	40	73.339.4035.0	1
with threaded collar	BAS GUT GC 16H M40 A1	40	73.339.4035.1	1
1 cable gland, right, 1 x M25				
with cover				
with cable gland, IP54, ➞|Ø|⇜ 7.5 – 19 mm	BAS GUT GH 16H M25 A0	25	73.342.4035.0	1
with threaded collar	BAS GUT GH 16H M25 A1	25	73.342.4035.1	1
1 cable gland, right, 1 x M32				
with cover				
with cable gland, IP54, ➞|Ø|⇜ 15 – 26.5 mm	BAS GUT GH 16H M32 A0	32	73.346.4035.0	1
with threaded collar	BAS GUT GH 16H M32 A1	32	73.346.4035.1	1
1 cable gland, bottom, 1 x M25				
without cover				
with cable gland, IP54, ➞|Ø|⇜ 7.5 – 19 mm	BAS GUT GD 16H M25 A0	25	73.333.4035.0	1
with threaded collar	BAS GUT GD 16H M25 A1	25	73.333.4035.1	1
with cover				
with cable gland, IP54, ➞|Ø|⇜ 7.5 – 19 mm	BAS GUT GI 16H M25 A0	25	73.343.4035.0	1
with threaded collar	BAS GUT GI 16H M25 A1	25	73.343.4035.1	1
1 cable gland, bottom, 1 x M32				
without cover				
with cable gland, IP54, ➞|Ø|⇜ 15 – 26.5 mm	BAS GUT GD 16H M32 A0	32	73.337.4035.0	1
with threaded collar	BAS GUT GD 16H M32 A1	32	73.337.4035.1	1
with cover				
with cable gland, IP54, ➞|Ø|⇜ 15 – 26.5 mm	BAS GUT GI 16H M32 A0	32	73.347.4035.0	1
with threaded collar	BAS GUT GI 16H M32 A1	32	73.347.4035.1	1

Technical data	
Material	Die cast aluminum alloy
Surface	powder coated
Locking levers	Handle: Polyamide, UL94-V0; stainless steel: V2A
Gasket	NBR
Degree of protection	
with latched locking levers	IP54
with appropriate cable glands	IP65
Temperature range	-40 … +120 °C

All Bases on this page are also available in M40 design.
Part numbers available on request.

Accessories, Dimensions

Description	Type	M	Part No.	P.U.
Accessories				
Cable gland IP68, plastic material, gray	Connection range 7 – 16 mm	25	Z5.507.1553.0	10
Cable gland IP68, nickel-plated brass	Connection range 11 – 18 mm	25	Z5.507.1521.0	10
Cable gland IP68, plastic material, gray	Connection range 10 – 21 mm	32	Z5.507.1753.0	10
Cable gland IP68, nickel-plated brass	Connection range 15 – 21 mm	32	Z5.507.1721.0	10
Cable gland IP68, plastic material, gray	Connection range 16 – 28 mm	40	Z5.507.1953.0	10
Cable gland IP68, nickel-plated brass	Connection range 19 – 27 mm	40	Z5.507.1921.0	10
Contact inserts				
See the product matrix			Page 24–25	

Bases

closed, 2 cable glands

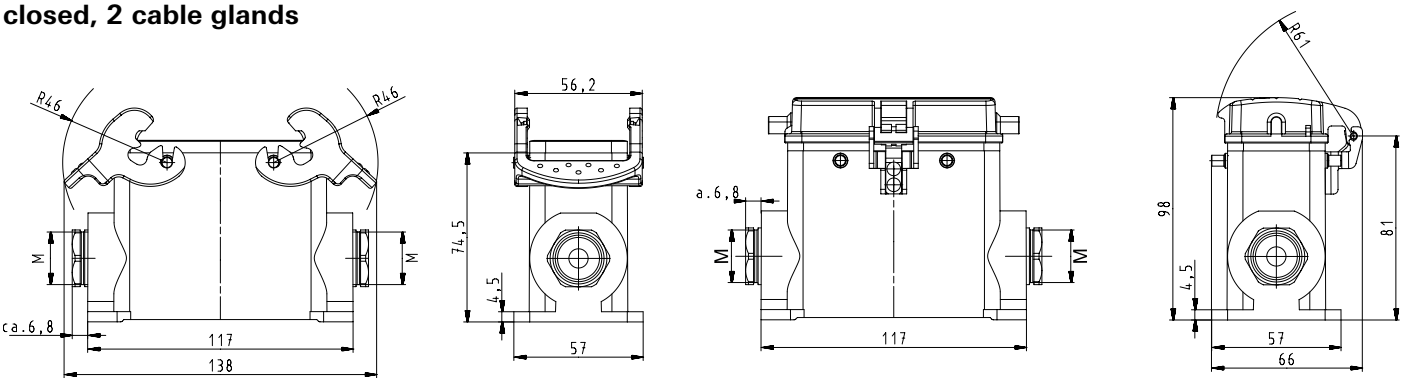

closed, 1 cable gland

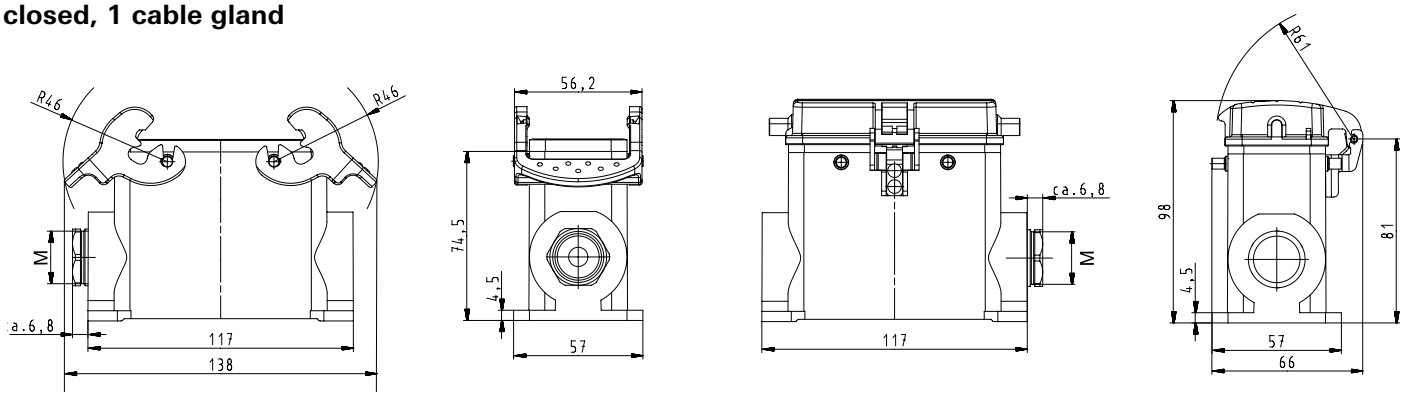

closed, 1 cable gland, bottom

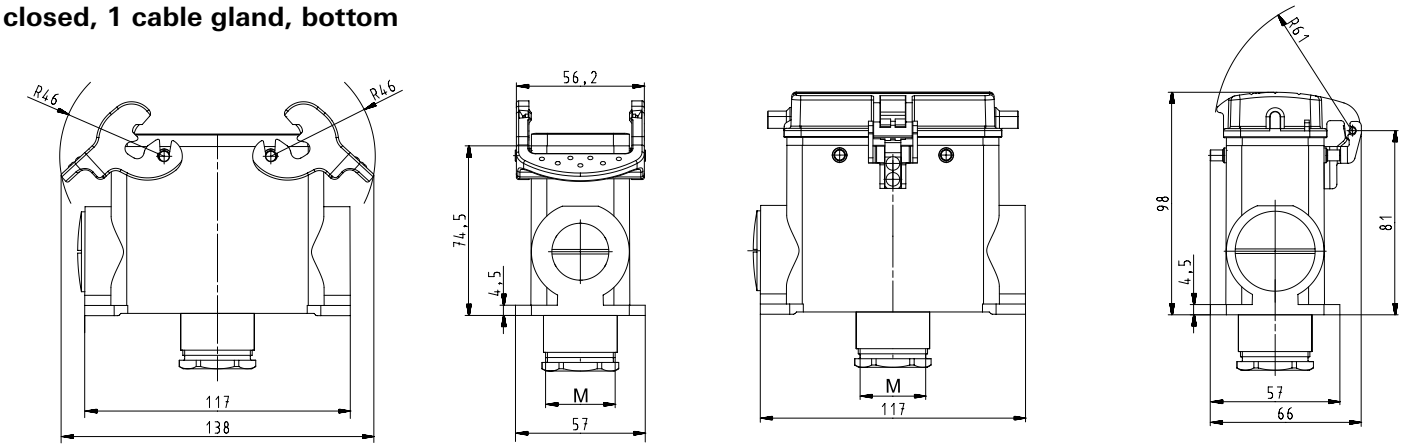

Hoods, single locking lever
Size 24

Hoods
Size 24

Lateral cable entry

Top cable entry

Multipole connectors for cable-to-cable couplings

Description	Type	M	Part No.	P.U.
Hoods, size 24	**Aluminum housing**			
Lateral cable entry M25				
with cable gland, IP54, →|Ø|← 7.5 – 19 mm	BAS GOT GG 24 M25 A0	25	71.350.2435.0	1
with threaded collar	BAS GOT GG 24 M25 A1	25	71.350.2435.1	1
Lateral cable entry M32				
with cable gland, IP54, →|Ø|← 15 – 26.5 mm	BAS GOT GG 24 M32 A0	32	71.353.2435.0	1
with threaded collar	BAS GOT GG 24 M32 A1	32	71.353.2435.1	1
Top cable entry M25				
with cable gland, IP54, →|Ø|← 7.5 – 19 mm	BAS GOT GI 24 M25 A0	25	71.352.2435.0	1
with threaded collar	BAS GOT GI 24 M25 A1	25	71.352.2435.1	1
Top cable entry M32				
with cable gland, IP54, →|Ø|← 15 – 26.5 mm	BAS GOT GI 24 M32 A0	32	71.354.2435.0	1
with threaded collar	BAS GOT GI 24 M32 A1	32	71.354.2435.1	1
Multipole connectors for cable-to-cable couplings M25				
with cable gland, IP54, →|Ø|← 7.5 – 19 mm	BAS GOT GI 24 M25 A0	25	71.352.2435.0	1
with cable gland, IP54, →|Ø|← 7.5 – 19 mm Locking levers and gasket	BAS GOT GL 24 M25 A0	25	71.372.2435.0	1
with threaded collar	BAS GOT GI 24 M25 A1	25	71.352.2435.1	1
with threaded collar Locking levers and gasket	BAS GOT GL 24 M25 A1	25	71.372.2435.1	1
Multipole connectors for cable-to-cable couplings M32				
with cable gland, IP54, →|Ø|← 15 – 26.5 mm	BAS GOT GI 24 M32 A0	32	71.354.2435.0	1
with cable gland, IP54, →|Ø|← 15 – 26.5 mm Locking levers and gasket	BAS GOT GL 24 M32 A0	32	71.374.2435.0	1

Technical data	
Material	Die cast aluminum alloy
Surface	powder coated
Locking levers at Multipole connectors	Handle: Polyamide, UL94-V0; stainless steel: V2A
Gasket at Multipole connectors	NBR
Degree of protection	
with latched locking levers	IP54
with appropriate cable glands	IP65
Temperature range	-40 … +120 °C

Description	Type	M	Part No.	P.U.
Accessories				
Cable gland IP68, plastic material, gray	Connection range 7 – 16 mm	25	Z5.507.1553.0	10
Cable gland IP68, nickel-plated brass	Connection range 11 – 18 mm	25	Z5.507.1521.0	10
Cable gland IP68, plastic material, gray	Connection range 10 – 21 mm	32	Z5.507.1753.0	10
Cable gland IP68, nickel-plated brass	Connection range 15 – 21 mm	32	Z5.507.1721.0	10
Strain relief IP54, nickel-plated brass	Connection range 14 – 20 mm	25	Z5.507.9721.0	10
Strain relief IP54, nickel-plated brass	Connection range 19 – 29 mm	32	Z5.507.9821.0	10
Contact inserts				
See the product matrix			Page 24–25	

Dimensions

Hoods

Lateral cable entry

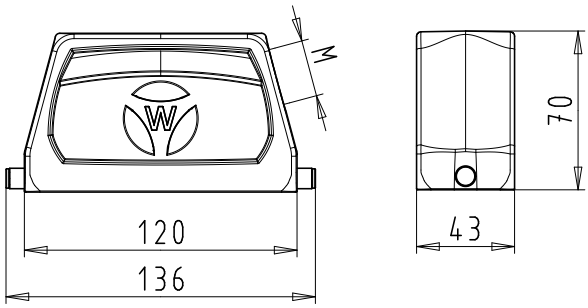

Top cable entry

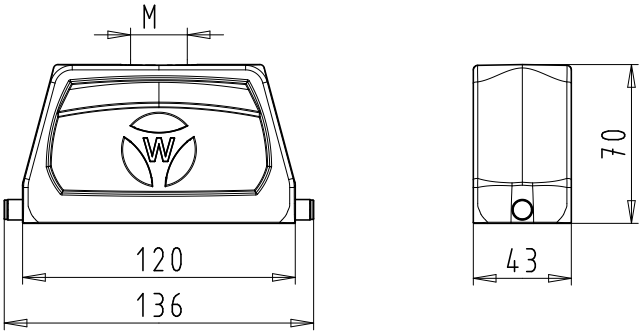

Multipole connectors for cable-to-cable couplings

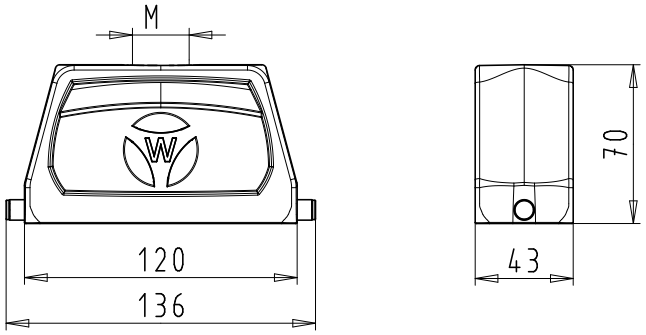

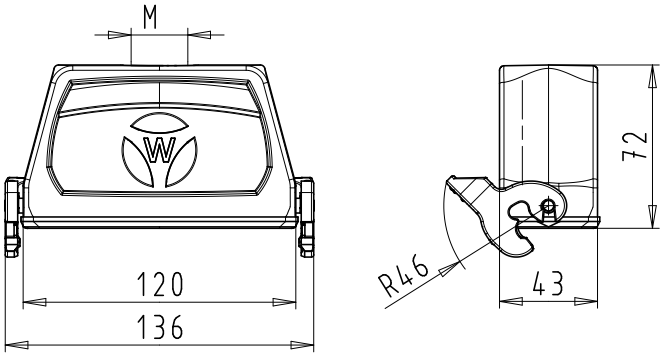

Hoods, single locking lever
Size 24H, increased height design

Hoods
Size 24H,
increased height design

Lateral cable entry

Top cable entry

Description	Type	M	Part No.	P.U.
Hoods, size 24H	**Aluminum housing**			
Lateral cable entry M25				
with cable gland, IP54, ➞IØI⇜ 7.5 – 19 mm	BAS GOT GG 24H M25 A0	25	76.350.6435.0	1
with threaded collar	BAS GOT GG 24H M25 A1	25	76.350.6435.1	1
Lateral cable entry M32				
with cable gland, IP54, ➞IØI⇜ 15 – 26.5 mm	BAS GOT GG 24H M32 A0	32	76.353.6435.0	1
with threaded collar	BAS GOT GG 24H M32 A1	32	76.353.6435.1	1
Lateral cable entry M40				
with threaded collar	BAS GOT GG 24H M40 A1	40	76.360.6435.1	1
Top cable entry M25				
with cable gland, IP54, ➞IØI⇜ 7.5 – 19 mm	BAS GOT GI 24H M25 A0	25	76.352.6435.0	1
with threaded collar	BAS GOT GI 24H M25 A1	25	76.352.6435.1	1
Top cable entry M32				
with cable gland, IP54, ➞IØI⇜ 15 – 26.5 mm	BAS GOT GI 24H M32 A0	32	76.354.6435.0	1
with threaded collar	BAS GOT GI 24H M32 A1	32	76.354.6435.1	1
Top cable entry M40				
with threaded collar	BAS GOT GI 24H M40 A1	40	76.362.6435.1	1

Technical data	
Material metal/plastic	Die cast aluminum alloy
Surface	powder coated
Locking levers	-
Gasket	-
Degree of protection	
with latched locking levers	IP54
with appropriate cable glands	IP65
Temperature range	-40 … +120 °C

Description	Type	M	Part No.	P.U.
Accessories				
Cable gland IP68, plastic material, gray	Connection range 7 – 16 mm	25	Z5.507.1553.0	10
Cable gland IP68, nickel-plated brass	Connection range 11 – 18 mm	25	Z5.507.1521.0	10
Cable gland IP68, plastic material, gray	Connection range 10 – 21 mm	32	Z5.507.1753.0	10
Cable gland IP68, nickel-plated brass	Connection range 15 – 21 mm	32	Z5.507.1721.0	10
Cable gland IP68, plastic material, gray	Connection range 16 – 28 mm	40	Z5.507.1953.0	1
Cable gland IP68, nickel-plated brass	Connection range 19 – 27 mm	40	Z5.507.1921.0	1
Strain relief IP54, nickel-plated brass	Connection range 14 – 20 mm	25	Z5.507.9721.0	10
Strain relief IP54, nickel-plated brass	Connection range 19 – 29 mm	32	Z5.507.9821.0	10
Contact inserts				
See the product matrix			Page 24–25	

Dimensions

Hoods

Lateral cable entry

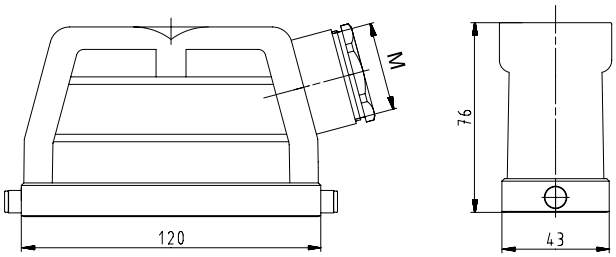

Top cable entry

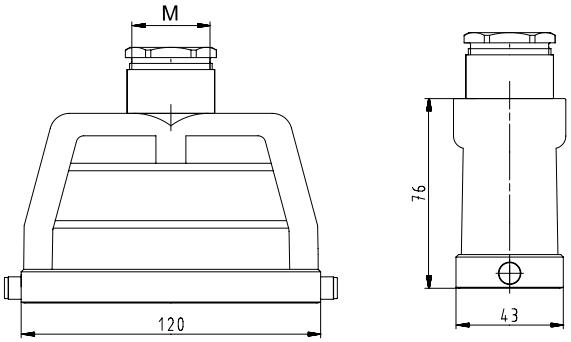

Bases, single locking lever
Size 24

Bases, Size 24

open

without cover
with cover

closed
1 cable gland, lateral cable entry

without cover
with cover

closed
1 cable gland, bottom

without cover
with cover

Description	Type	M	Part No.	P.U.
Bases, size 24	**Aluminum housing**			
Open-bottom base				
without cover	BAS GUT GK 24 A		71.320.2428.0	1
with cover	BAS GUT GP 24 A		71.325.2428.0	1
Closed-bottom base				
2 cable glands, 2 x M25				
without cover				
with cable gland, IP54, →|Ø|← 7.5– 19 mm	BAS GUT GL 24 M25 A0	25	71.330.2435.0	1
with threaded collar	BAS GUT GL 24 M25 A1	25	71.330.2435.1	1
with cover				
with cable gland, IP54, →|Ø|← 7.5– 19 mm	BAS GUT GR 24 M25 A0	25	71.340.2435.0	1
with threaded collar	BAS GUT GR 24 M25 A1	25	71.340.2435.1	1
1 cable gland, left, 1 x M25				
without cover				
with cable gland, IP54, →|Ø|← 7.5– 19 mm	BAS GUT GM 24 M25 A0	25	71.331.2435.0	1
with threaded collar	BAS GUT GM 24 M25 A1	25	71.331.2435.1	1
with cover				
with cable gland, IP54, →|Ø|← 7.5– 19 mm	BAS GUT GS 24 M25 A0	25	71.341.2435.0	1
with threaded collar	BAS GUT GS 24 M25 A1	25	71.341.2435.1	1
1 cable gland, right, 1 x M25				
with cover				
with cable gland, IP54, →|Ø|← 7.5– 19 mm	BAS GUT GT 24 M25 A0	25	71.342.2435.0	1
with threaded collar	BAS GUT GT 24 M25 A1	25	71.342.2435.1	1
1 cable gland, bottom, 1 x M25				
without cover				
with cable gland, IP54, →|Ø|← 7.5– 19 mm	BAS GUT GO 24 M25 A0	25	71.333.2435.0	1
with threaded collar	BAS GUT GO 24 M25 A1	25	71.333.2435.1	1
with cover				
with cable gland, IP54, →|Ø|← 7.5– 19 mm	BAS GUT GU 24 M25 A0	25	71.343.2435.0	1
with threaded collar	BAS GUT GU 24 M25 A1	25	71.343.2435.1	1

Technical data	
Material	Die cast aluminum alloy
Surface	powder coated
Locking levers	Handle: Polyamide, UL94-V0; stainless steel: V2A
Gasket	NBR
Degree of protection	
with latched locking levers	IP54
with appropriate cable glands	IP65
Temperature range	-40 … +120 °C

Description	Type	M	Part No.	P.U.
Accessories				
Cable gland IP68, plastic material, gray	Connection range 7 – 16 mm	25	Z5.507.1553.0	10
Cable gland IP68, nickel-plated brass	Connection range 11 – 18 mm	25	Z5.507.1521.0	10
Contact inserts				
See the product matrix			Page 24–25	

Dimensions

Bases

open

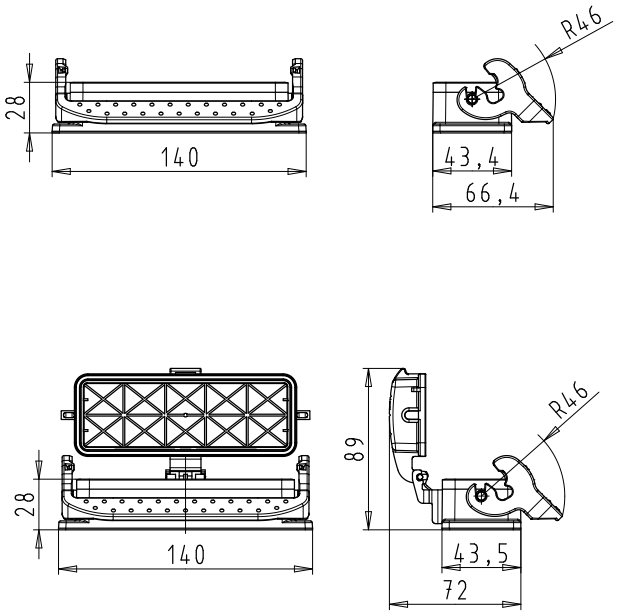

closed, 2 cable glands

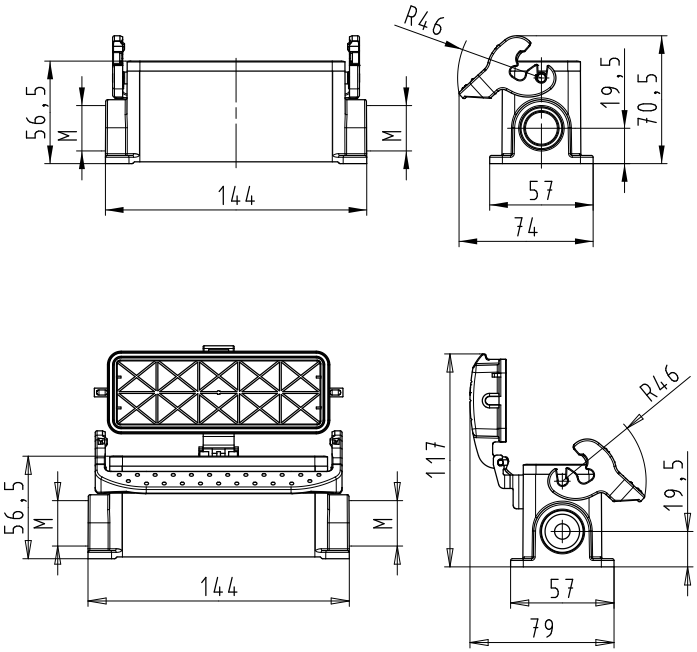

closed, 1 cable gland, lateral cable entry

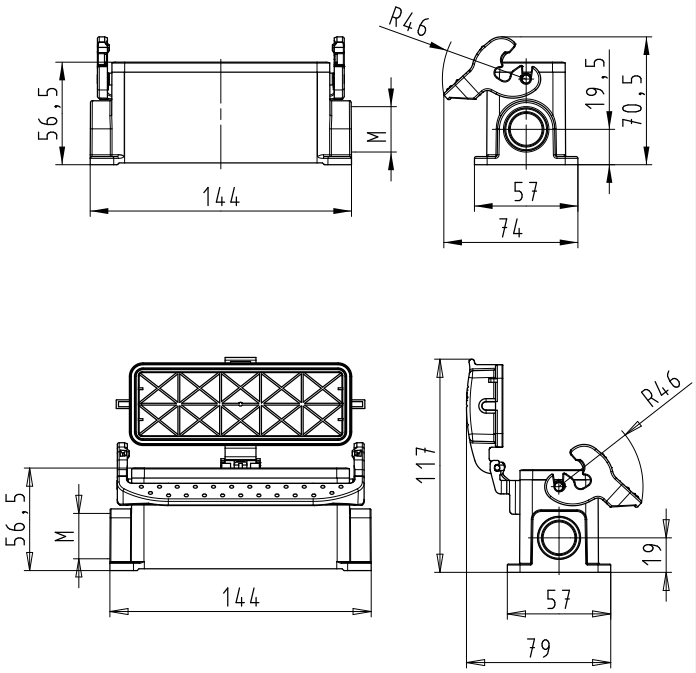

closed, 1 cable gland, bottom

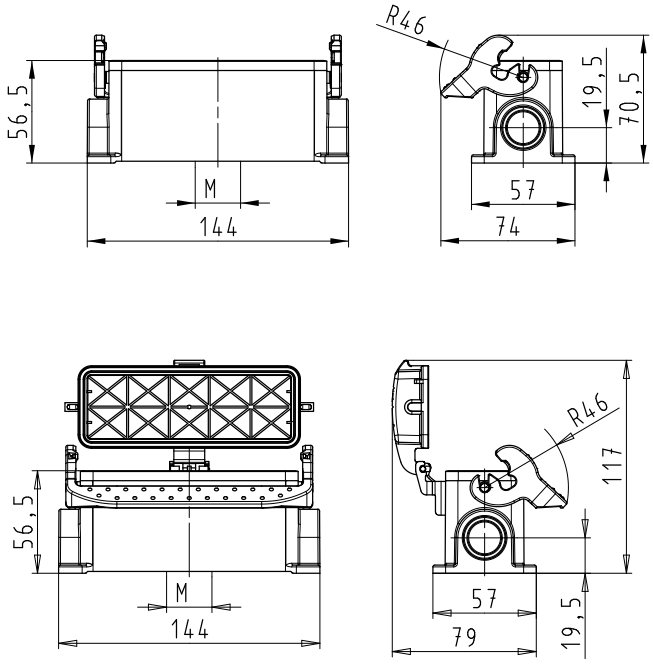

Bases, single locking lever
Size 24H, increased height design

Bases
Size 24H,
increased height design

closed
2 cable glands
without cover
with cover

closed
1 cable gland, bottom
without cover

Description	Type	M	Part No.	P.U.
Bases, size 24H	**Aluminum housing**			
Closed-bottom base				
2 cable glands, 2 x M32				
without cover				
with cable gland, IP54, ➞|Ø|⇐ 15 – 26.5 mm	BAS GUT GL 24H M32 A0	32	76.334.6435.0	1
with threaded collar	BAS GUT GL 24H M32 A1	32	76.334.6435.1	1
with cover				
with cable gland, IP54, ➞|Ø|⇐ 15 – 26.5 mm	BAS GUT GR 24H M32 A0	32	76.344.6435.0	1
with threaded collar	BAS GUT GR 24H M32 A1	32	76.344.6435.1	1
2 cable glands, 2 x M40				
without cover				
with threaded collar	BAS GUT GL 24H M40 A1	40	76.338.6435.1	1
1 cable gland, left, 1 x M32				
without cover				
with cable gland, IP54, ➞|Ø|⇐ 15 – 26.5 mm	BAS GUT GM 24H M32 A0	32	76.335.6435.0	1
with threaded collar	BAS GUT GM 24H M32 A1	32	76.335.6435.1	1
with cover				
with cable gland, IP54, ➞|Ø|⇐ 15 – 26.5 mm	BAS GUT GS 24H M32 A0	32	76.345.6435.0	1
with threaded collar	BAS GUT GS 24H M32 A1	32	76.345.6435.1	1
1 cable gland, left, 1 x M40				
without cover				
with threaded collar	BAS GUT GM 24H M40 A0	40	76.339.6435.1	1
1 cable gland, right, 1 x M32				
with cover				
with cable gland, IP54, ➞|Ø|⇐ 15 – 26.5 mm	BAS GUT GT 24H M32 A0	32	76.346.6435.0	1
with threaded collar	BAS GUT GT 24H M32 A1	32	76.346.6435.1	1
1 cable gland, bottom, 1 x M32				
without cover				
with cable gland, IP54, ➞|Ø|⇐ 15 – 26.5 mm	BAS GUT GO 24H M32 A0	32	76.337.6435.0	1
with threaded collar	BAS GUT GO 24H M32 A1	32	76.337.6435.1	1
with cover				
with cable gland, IP54, ➞|Ø|⇐ 15 – 26.5 mm	BAS GUT GU 24H M32 A0	32	76.347.6435.0	1
with threaded collar	BAS GUT GU 24H M32 A1	32	76.347.6435.1	1

Technical data	
Material	Die cast aluminum alloy
Surface	powder coated
Locking levers	Handle: Polyamide, UL94-V0; stainless steel: V2A
Gasket	NBR
Degree of protection	
with latched locking levers	IP54
with appropriate cable glands	IP65
Temperature range	-40 … +120 °C

Description	Type	M	Part No.	P.U.
Accessories				
Cable gland IP68, plastic material, gray	Connection range 7 – 16 mm	25	Z5.507.1553.0	10
Cable gland IP68, nickel-plated brass	Connection range 11 – 18 mm	25	Z5.507.1521.0	10
Cable gland IP68, plastic material, gray	Connection range 10 – 21 mm	32	Z5.507.1753.0	10
Cable gland IP68, nickel-plated brass	Connection range 15 – 21 mm	32	Z5.507.1721.0	10
Cable gland IP68, plastic material, gray	Connection range 16 – 28 mm	40	Z5.507.1953.0	1
Cable gland IP68, nickel-plated brass	Connection range 19 – 27 mm	40	Z5.507.1921.0	1
Contact inserts				
See the product matrix			Page 24–25	

All Bases with "cable gland bottom" on this page are also available in M40 design.
Part numbers available on request.

Dimensions

Bases

closed, 2 cable glands

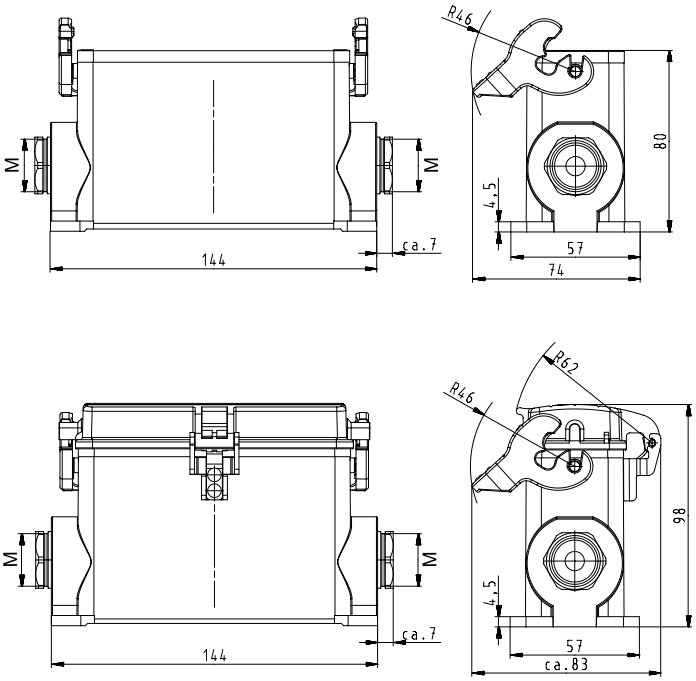

closed, 1 cable gland

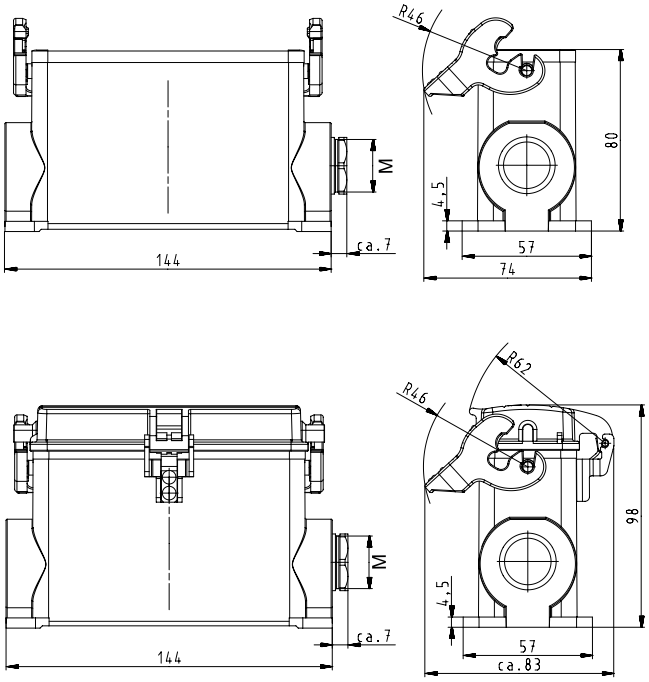

closed, 1 cable gland, bottom

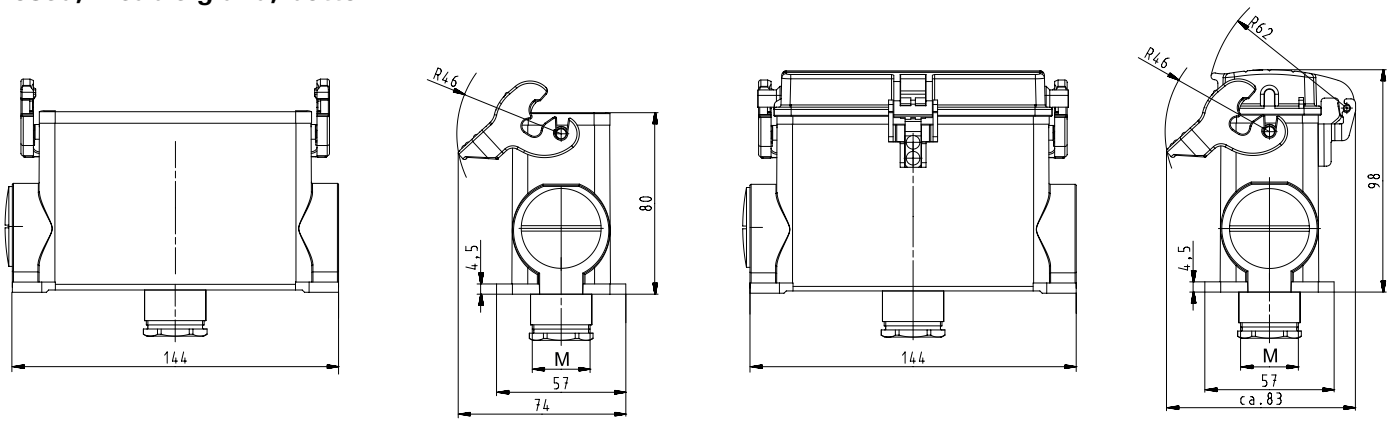

Hoods, double locking lever
Size 24

Hoods
Size 24

Lateral cable entry

Top cable entry

Description	Type	M	Part No.	P.U.
Hoods, size 24	**Aluminum housing**			
Lateral cable entry M25				
with cable gland, IP54, ⇸IØI⇷ 7.5 – 19 mm	BAS GOT GA 24 M25 A0	25	70.350.2435.0	1
with threaded collar	BAS GOT GA 24 M25 A1	25	70.350.2435.1	1
Lateral cable entry M32				
with cable gland, IP54, ⇸IØI⇷ 15 – 26.5 mm	BAS GOT GA 24 M32 A0	32	70.353.2435.0	1
with threaded collar	BAS GOT GA 24 M32 A1	32	70.353.2435.1	1
Top cable entry M25				
with cable gland, IP54, ⇸IØI⇷ 7.5 – 19 mm	BAS GOT GC 24 M25 A0	25	70.352.2435.0	1
with threaded collar	BAS GOT GC 24 M25 A1	25	70.352.2435.1	1
Top cable entry M32				
with cable gland, IP54, ⇸IØI⇷ 15 – 26.5 mm	BAS GOT GC 24 M32 A0	32	70.354.2435.0	1
with threaded collar	BAS GOT GC 24 M32 A1	32	70.354.2435.1	1

Technical data	
Material	Die cast aluminum alloy
Surface	powder coated
Locking levers	-
Gasket	-
Degree of protection	
with latched locking levers	IP54
with appropriate cable glands	IP65
Temperature range	-40 … +120 °C

Description	Type	M	Part No.	P.U.
Accessories				
Cable gland IP68, plastic material, gray	Connection range 7 – 16 mm	25	Z5.507.1553.0	10
Cable gland IP68, nickel-plated brass	Connection range 11 – 18 mm	25	Z5.507.1521.0	10
Cable gland IP68, plastic material, gray	Connection range 10 – 21 mm	32	Z5.507.1753.0	10
Cable gland IP68, nickel-plated brass	Connection range 15 – 21 mm	32	Z5.507.1721.0	10
Strain relief IP54, nickel-plated brass	Connection range 14 – 20 mm	25	Z5.507.9721.0	10
Strain relief IP54, nickel-plated brass	Connection range 19 – 29 mm	32	Z5.507.9821.0	10
Contact inserts				
See the product matrix			Page 24–25	

Dimensions

Hoods

Lateral cable entry

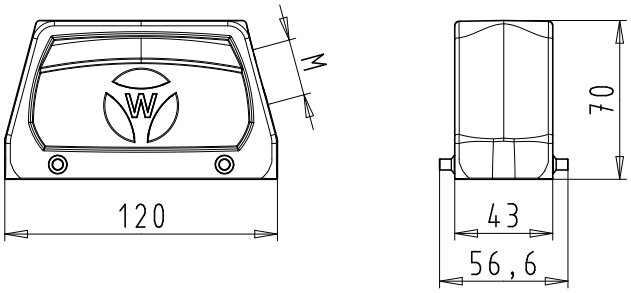

Top cable entry

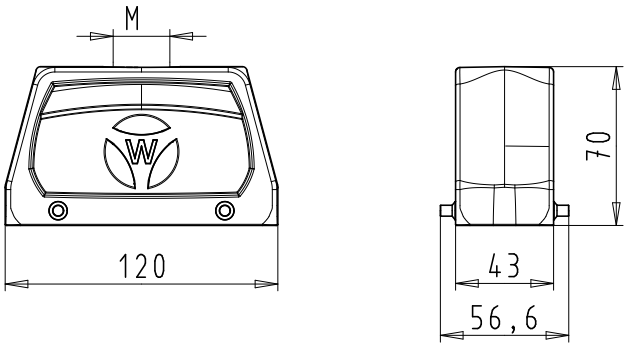

Hoods, double locking lever with Locking levers, Size 24

Hoods Size 24

Lateral cable entry

Top cable entry

Multipole connectors for cable-to-cable couplings

Description	Type	M	Part No.	P.U.
Hoods, size 24	**Aluminum housing**			
Lateral cable entry M25				
with cable gland, IP54, →|Ø|← 7.5 – 19 mm	BAS GOT GD 24 M25 A0	25	70.355.2435.0	1
with threaded collar	BAS GOT GD 24 M25 A1	25	70.355.2435.1	1
Lateral cable entry M32				
with cable gland, IP54, →|Ø|← 15 – 26.5 mm	BAS GOT GD 24 M32 A0	32	70.358.2435.0	1
with threaded collar	BAS GOT GD 24 M32 A1	32	70.358.2435.1	1
Top cable entry M25				
with cable gland, IP54, →|Ø|← 7.5 – 19 mm	BAS GOT GF 24 M25 A0	25	70.357.2435.0	1
with threaded collar	BAS GOT GF 24 M25 A1	25	70.357.2435.1	1
Top cable entry M32				
with cable gland, IP54, →|Ø|← 15 – 26.5 mm	BAS GOT GF 24 M32 A0	32	70.359.2435.0	1
with threaded collar	BAS GOT GF 24 M32 A1	32	70.359.2435.1	1
Multipole connectors for cable-to-cable couplings M32				
with cable gland, IP54, →|Ø|← 15 – 26.5 mm	BAS GOT GC 24 M32 A0	32	70.354.2435.0	1
with cable gland, IP54, →|Ø|← 15 – 26.5 mm Locking levers and gasket	BAS GOT GK 24 M32 A0	32	70.374.2435.0	1
with threaded collar	BAS GOT GC 24 M32 A1	32	70.354.2435.1	1
with threaded collar Locking levers and gasket	BAS GOT GK 24 M32 A1	32	70.374.2435.1	1

Technical data	
Material	Die cast aluminum alloy
Surface	powder coated
Locking levers	Handle: Polyamide, UL94-V0; stainless steel: V2A
Gasket for Multipole connectors	NBR
Degree of protection	
with latched locking levers	IP54
with appropriate cable glands	IP65
Temperature range	-40 … +120 °C

Description	Type	M	Part No.	P.U.
Accessories				
Cable gland IP68, plastic material, gray	Connection range 7 – 16 mm	25	Z5.507.1553.0	10
Cable gland IP68, nickel-plated brass	Connection range 11 – 18 mm	25	Z5.507.1521.0	10
Cable gland IP68, plastic material, gray	Connection range 10 – 21 mm	32	Z5.507.1753.0	10
Cable gland IP68, nickel-plated brass	Connection range 15 – 21 mm	32	Z5.507.1721.0	10
Strain relief IP54, nickel-plated brass	Connection range 14 – 20 mm	25	Z5.507.9721.0	10
Strain relief IP54, nickel-plated brass	Connection range 19 – 29 mm	32	Z5.507.9821.0	10
Contact inserts				
See the product matrix			Page 24–25	

Dimensions

Hoods with Locking levers

Lateral cable entry

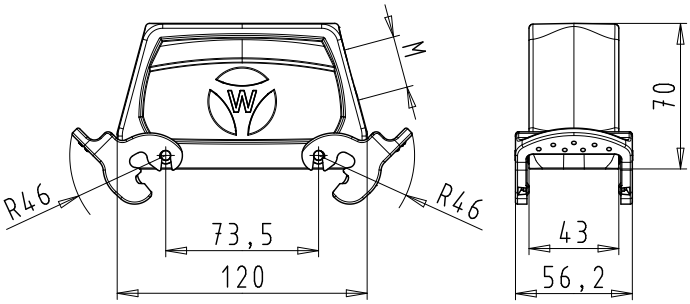

Top cable entry

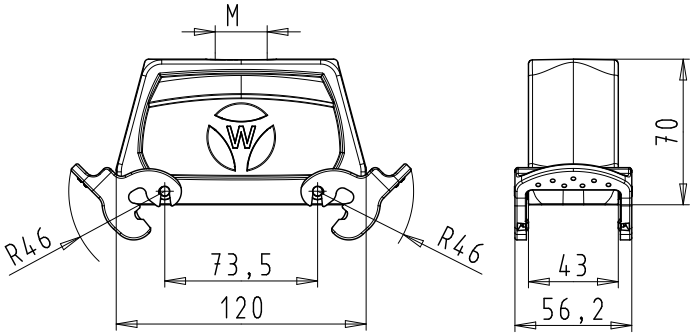

Multipole connectors for cable-to-cable couplings

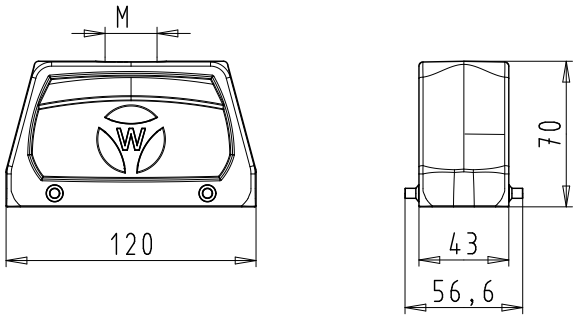

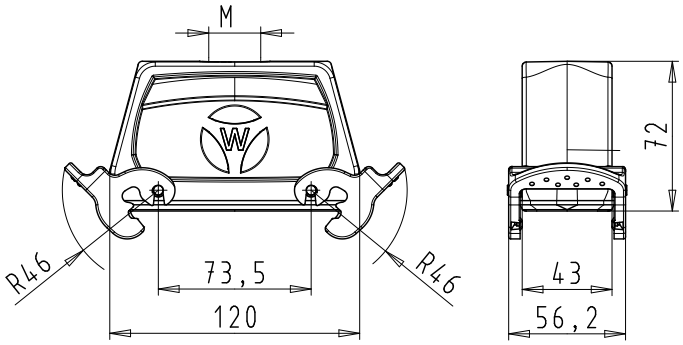

Hoods, double locking lever
Size 24H, increased height design

Hoods
Size 24H, increased height design

Lateral cable entry

Top cable entry

Multipole connectors for cable-to-cable couplings

Hoods, size 24H	**Aluminum housing**			
Lateral cable entry M25				
with cable gland, IP54, ➞IØI⇜ 7.5 – 19 mm	BAS GOT GA 24H M25 A0	25	73.350.6435.0	1
with threaded collar	BAS GOT GA 24H M25 A1	25	73.350.6435.1	1
Lateral cable entry M32				
with cable gland, IP54, ➞IØI⇜ 15 – 26.5 mm	BAS GOT GA 24H M32 A0	32	73.353.6435.0	1
with threaded collar	BAS GOT GA 24H M32 A1	32	73.353.6435.1	1
Lateral cable entry M40				
with cable gland, IP54, ➞IØI⇜ 23 – 32 mm	BAS GOT GA 24H M40 A0	40	73.360.6435.0	1
with threaded collar	BAS GOT GA 24H M40 A1	40	73.360.6435.1	1
Top cable entry M25				
with cable gland, IP54, ➞IØI⇜ 7.5 – 19 mm	BAS GOT GC 24H M25 A0	25	73.352.6435.0	1
with threaded collar	BAS GOT GC 24H M25 A1	25	73.352.6435.1	1
Top cable entry M32				
with cable gland, IP54, ➞IØI⇜ 15 – 26.5 mm	BAS GOT GC 24H M32 A0	32	73.354.6435.0	1
with threaded collar	BAS GOT GC 24H M32 A1	32	73.354.6435.1	1
Top cable entry M40				
with cable gland, IP54, ➞IØI⇜ 23 – 32 mm	BAS GOT GC 24H M40 A0	40	73.362.6435.0	1
with threaded collar	BAS GOT GC 24H M40 A1	40	73.362.6435.1	1
Multipole connectors for cable-to-cable couplings M32				
with threaded collar, locking levers and gasket	BAS GOT GK 24H M32 A1	32	73.374.6435.1	1
Multipole connectors for cable-to-cable couplings M40				
with threaded collar, locking levers and gasket	BAS GOT GK 24H M40 A1	40	73.378.6435.1	1

Technical data	
Material	Die cast aluminum alloy
Surface	powder coated
Locking levers	-
Gasket	-
Degree of protection	
with latched locking levers	IP54
with appropriate cable glands	IP65
Temperature range	-40 … +120 °C

Description	Type	M	Part No.	P.U.
Accessories				
Cable gland IP68, plastic material, gray	Connection range 7 – 16 mm	25	Z5.507.1553.0	10
Cable gland IP68, nickel-plated brass	Connection range 11 – 18 mm	25	Z5.507.1521.0	10
Cable gland IP68, plastic material, gray	Connection range 10 – 21 mm	32	Z5.507.1753.0	10
Cable gland IP68, nickel-plated brass	Connection range 15 – 21 mm	32	Z5.507.1721.0	10
Cable gland IP68, plastic material, gray	Connection range 16 – 28 mm	40	Z5.507.1953.0	1
Cable gland IP68, nickel-plated brass	Connection range 19 – 27 mm	40	Z5.507.1921.0	1
Strain relief IP54, nickel-plated brass	Connection range 14 – 20 mm	25	Z5.507.9721.0	10
Strain relief IP54, nickel-plated brass	Connection range 19 – 29 mm	32	Z5.507.9821.0	10
Contact inserts				
See the product matrix			Page 24–25	

Dimensions

Hoods

Lateral cable entry

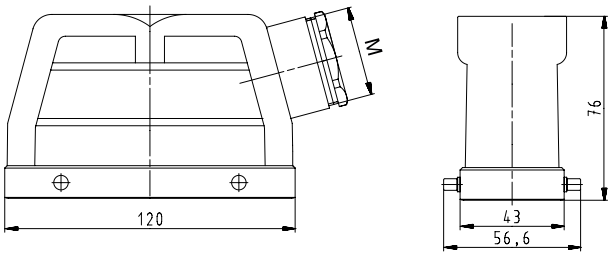

Top cable entry

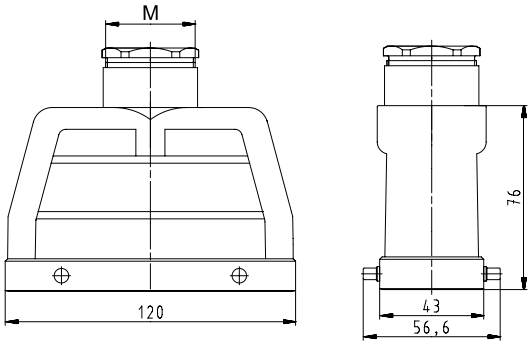

Multipole connectors for cable-to-cable couplings

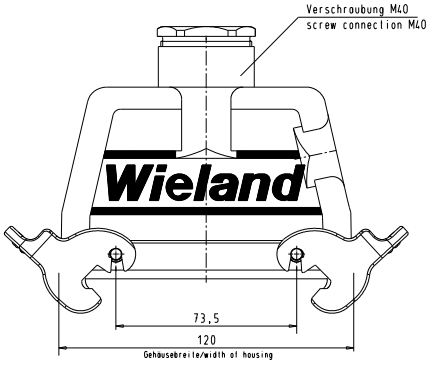

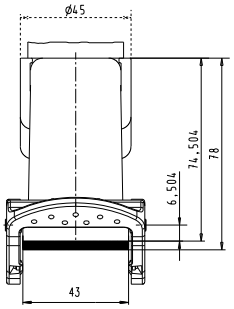

Hoods, double locking lever with Locking levers, Size 24H, increased height design

Hoods
Size 24H, increased height design

Lateral cable entry

Top cable entry

Description	Type	M	Part No.	P.U.
Hoods, size 24H	**Aluminum housing**			
Lateral cable entry M25				
with cable gland, IP54, ⇸IØI⇷ 7.5 – 19 mm	BAS GOT GD 24H M25 A0	25	73.355.6435.0	1
with threaded collar	BAS GOT GD 24H M25 A1	25	73.355.6435.1	1
Lateral cable entry M32				
with cable gland, IP54, ⇸IØI⇷ 15 – 26.5 mm	BAS GOT GD 24H M32 A0	32	73.358.6435.0	1
with threaded collar	BAS GOT GD 24H M32 A1	32	73.358.6435.1	1
Lateral cable entry M40				
with threaded collar	BAS GOT GD 24H M40 A1	40	73.365.6435.1	1
Top cable entry M25				
with cable gland, IP54, ⇸IØI⇷ 7.5 – 19 mm	BAS GOT GF 24H M25 A0	25	73.357.6435.0	1
with threaded collar	BAS GOT GF 24H M25 A1	25	73.357.6435.1	1
Top cable entry M32				
with cable gland, IP54, ⇸IØI⇷ 15 – 26.5 mm	BAS GOT GF 24H M32 A0	32	73.359.6435.0	1
with threaded collar	BAS GOT GF 24H M32 A1	32	73.359.6435.1	1
Top cable entry M40				
with threaded collar	BAS GOT GF 24H M40 A1	40	73.367.6435.0	1

Technical data	
Material	Die cast aluminum alloy
Surface	powder coated
Locking levers	Handle: Polyamide, UL94-V0; stainless steel: V2A
Gasket	-
Degree of protection	
with latched locking levers	IP54
with appropriate cable glands	IP65
Temperature range	-40 … +120 °C

Description	Type	M	Part No.	P.U.
Accessories				
Cable gland IP68, plastic material, gray	Connection range 7 – 16 mm	25	Z5.507.1553.0	10
Cable gland IP68, nickel-plated brass	Connection range 11 – 18 mm	25	Z5.507.1521.0	10
Cable gland IP68, plastic material, gray	Connection range 10 – 21 mm	32	Z5.507.1753.0	10
Cable gland IP68, nickel-plated brass	Connection range 15 – 21 mm	32	Z5.507.1721.0	10
Cable gland IP68, plastic material, gray	Connection range 16 – 28 mm	40	Z5.507.1953.0	1
Cable gland IP68, nickel-plated brass	Connection range 19 – 27 mm	40	Z5.507.1921.0	1
Strain relief IP54, nickel-plated brass	Connection range 14 – 20 mm	25	Z5.507.9721.0	10
Strain relief IP54, nickel-plated brass	Connection range 19 – 29 mm	32	Z5.507.9821.0	10
Contact inserts				
See the product matrix			Page 24–25	

Dimensions

Hoods

Lateral cable entry

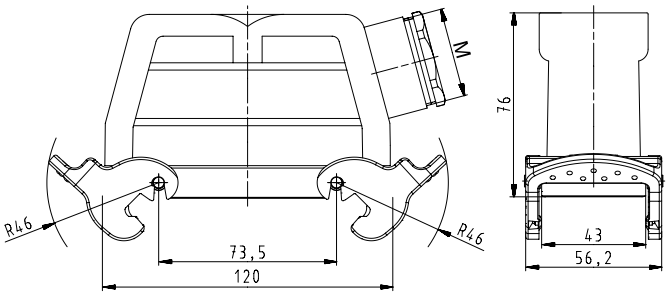

Top cable entry

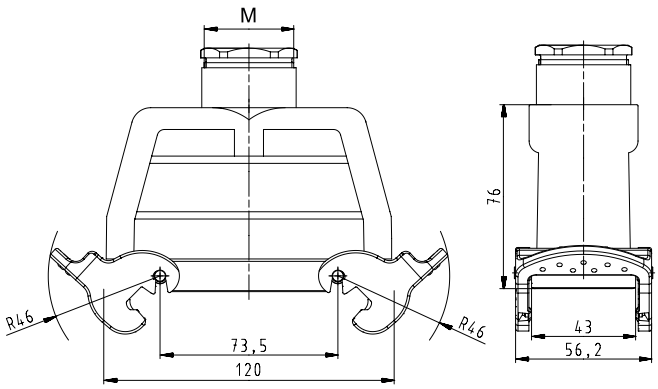

Hoods, double locking lever
Size 24XL

Hoods
Size 24XL

Lateral cable entry

Description	Type	M	Part No.	P.U.
Hoods, size 24XL	**Aluminum housing**			
Lateral cable entry M50				
with intermediate support	POW GOT GA 24 M50 69 A2	50	72.250.2435.2	1

Technical data	
Material	Die cast aluminum alloy
Surface	powder coated
Locking levers	-
Gasket	-
Degree of protection	
with latched locking levers	-
with appropriate cable glands	IP65
Temperature range	-40 … +120 °C

Contact inserts	
See the product matrix	Page 24–25

Dimensions

Lateral cable entry

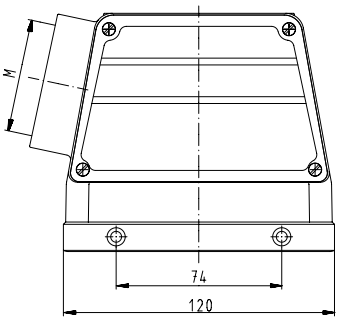

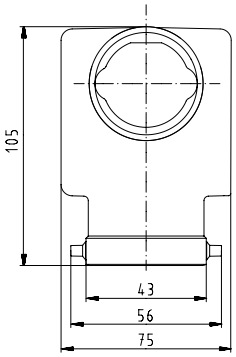

Bases, double locking lever
Size 24

Bases, Size 24

open

without cover
with cover

closed
1 cable gland, lateral cable entry

without cover
with cover

closed
1 cable gland, bottom

without cover
with cover

Bases, size 24	**Aluminum housing**			
Open-bottom base				
without cover	BAS GUT GA 24 A		70.320.2428.0	1
with cover	BAS GUT GE 24 A		70.325.2428.0	1
Closed-bottom base				
2 cable glands, 2 x M25				
without cover				
with cable gland, IP54, →|Ø|← 7.5 – 19 mm	BAS GUT GB 24 M25 A0	25	70.330.2435.0	1
with threaded collar	BAS GUT GB 24 M25 A1	25	70.330.2435.1	1
with cover				
with cable gland, IP54, →|Ø|← 7.5 – 19 mm	BAS GUT GF 24 M25 A0	25	70.340.2435.0	1
with threaded collar	BAS GUT GF 24 M25 A1	25	70.340.2435.1	1
1 cable gland, left, 1 x M25				
without cover				
with cable gland, IP54, →|Ø|← 7.5 – 19 mm	BAS GUT GC 24 M25 A0	25	70.331.2435.0	1
with threaded collar	BAS GUT GC 24 M25 A1	25	70.331.2435.1	1
with cover				
with cable gland, IP54, →|Ø|← 7.5 – 19 mm	BAS GUT GG 24 M25 A0	25	70.341.2435.0	1
with threaded collar	BAS GUT GG 24 M25 A1	25	70.341.2435.1	1
1 cable gland, right, 1 x M25				
with cover				
with cable gland, IP54, →|Ø|← 7.5 – 19 mm	BAS GUT GH 24 M25 A0	25	70.342.2435.0	1
with threaded collar	BAS GUT GH 24 M25 A1	25	70.342.2435.1	1
1 cable gland, bottom, 1 x M25				
without cover				
with cable gland, IP54, →|Ø|← 7.5 – 19 mm	BAS GUT GD 24 M25 A0	25	70.333.2435.0	1
with threaded collar	BAS GUT GD 24 M25 A1	25	70.333.2435.1	1
with cover				
with cable gland, IP54, →|Ø|← 7.5 – 19 mm	BAS GUT GI 24 M25 A0	25	70.343.2435.0	1
with threaded collar	BAS GUT GI 24 M25 A1	25	70.343.2435.1	1

Technical data	
Material	Die cast aluminum alloy
Surface	powder coated
Locking levers	Handle: Polyamide, UL94-V0; stainless steel: V2A
Gasket	NBR
Degree of protection	
with latched locking levers	IP54
with appropriate cable glands	IP65
Temperature range	-40 … +120 °C

Description	Type	M	Part No.	P.U.
Accessories				
Cable gland IP68, plastic material, gray	Connection range 7 – 16 mm	25	Z5.507.1553.0	10
Cable gland IP68, nickel-plated brass	Connection range 11 – 18 mm	25	Z5.507.1521.0	10
Contact inserts				
See the product matrix			Page 24–25	

Dimensions

Bases

open

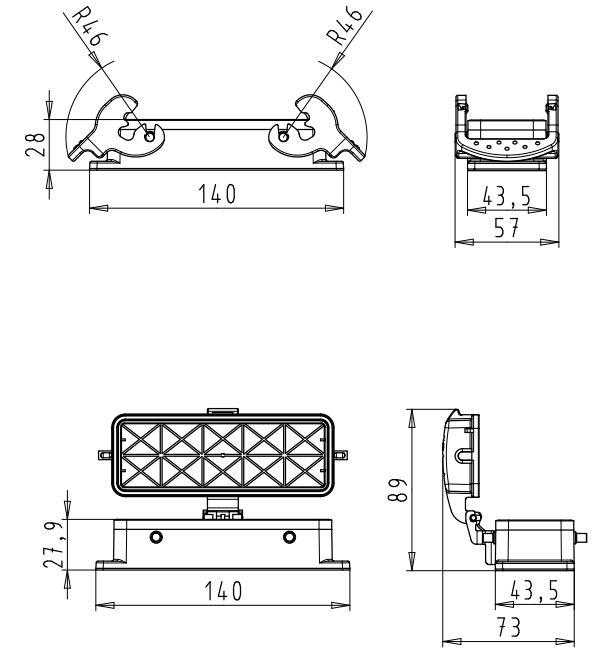

closed, 2 cable glands

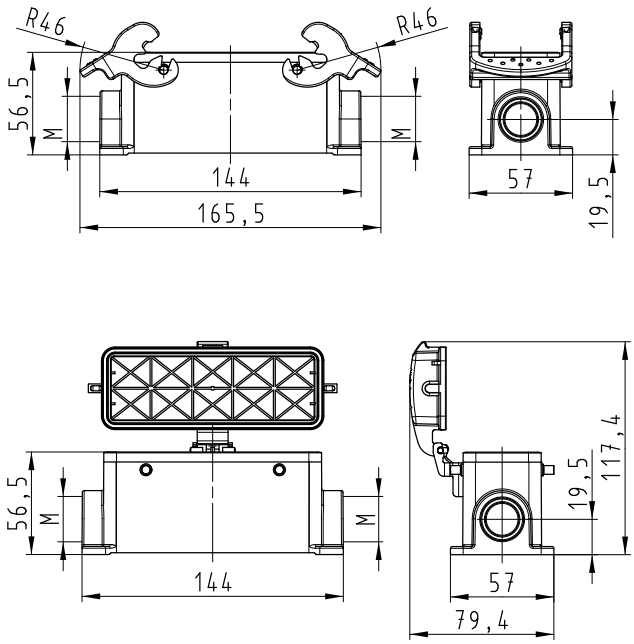

closed, 1 cable gland, lateral cable entry

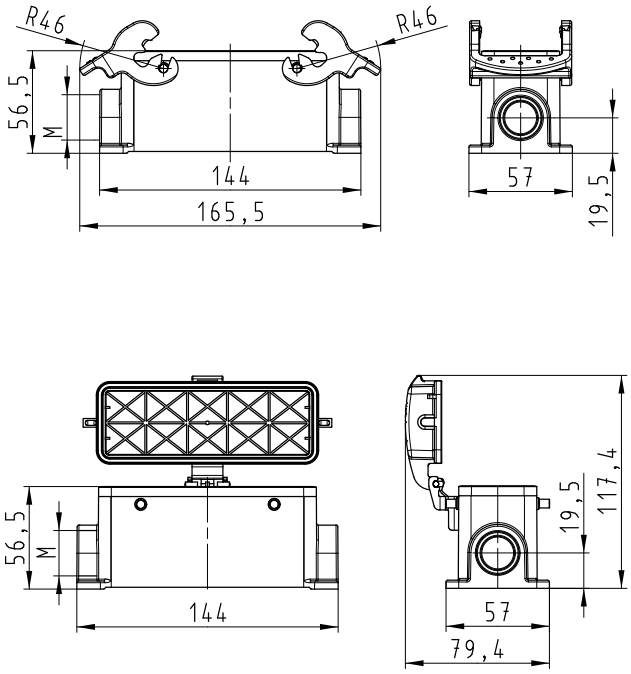

closed, 1 cable gland, bottom

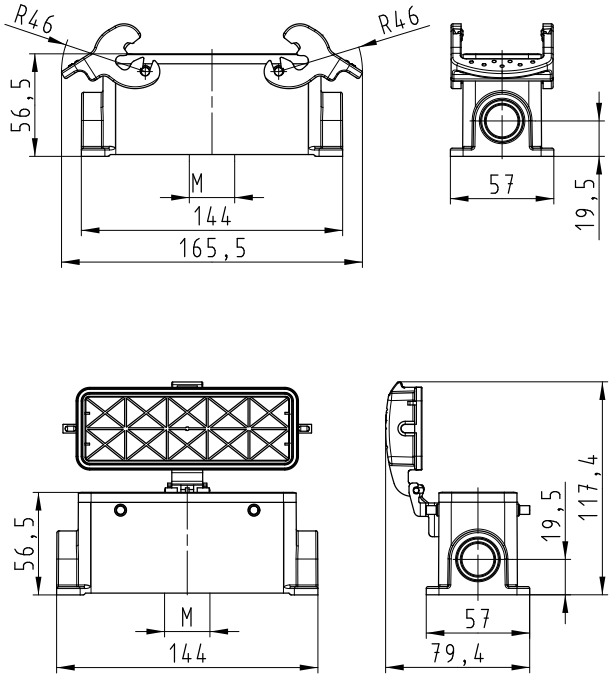

Bases, double locking lever
Size 24H, increased height design

Bases
Size 24H,
increased height design

closed
2 cable glands

without cover
with cover

closed
1 cable gland, bottom

without cover
with cover

Description	Type	M	Part No.	P.U.
Bases, size 24H	**Aluminum housing**			
Closed-bottom base				
2 cable glands, 2 x M32				
without cover				
with cable gland, IP54, ➞|Ø|⇐ 15 – 26.5 mm	BAS GUT GB 24H M32 A0	32	73.334.6435.0	1
with threaded collar	BAS GUT GB 24H M32 A1	32	73.334.6435.1	1
with cover				
with cable gland, IP54, ➞|Ø|⇐ 15 – 26.5 mm	BAS GUT GF 24H M32 A0	32	73.344.6435.0	1
with threaded collar	BAS GUT GF 24H M32 A1	32	73.344.6435.1	1
2 cable glands, 2 x M40				
without cover				
with threaded collar	BAS GUT GB 24H M40 A1	40	73.338.6435.1	1
1 cable gland, left, 1 x M32				
without cover				
with cable gland, IP54, ➞|Ø|⇐ 15 – 26.5 mm	BAS GUT GC 24H M32 A0	32	73.335.6435.0	1
with threaded collar	BAS GUT GC 24H M32 A1	32	73.335.6435.1	1
with cover				
with cable gland, IP54, ➞|Ø|⇐ 15 – 26.5 mm	BAS GUT GG 24H M32 A0	32	73.345.6435.0	1
with threaded collar	BAS GUT GG 24H M32 A1	32	73.345.6435.1	1
1 cable gland, left, 1 x M40				
without cover				
with threaded collar	BAS GUT GC 24H M40 A1	40	73.339.6435.1	1
1 cable gland, right, 1 x M32				
with cover				
with cable gland, IP54, ➞|Ø|⇐ 15 – 26.5 mm	BAS GUT GH 24H M32 A0	32	73.346.6435.0	1
with threaded collar	BAS GUT GH 24H M32 A1	32	73.346.6435.1	1
1 cable gland, bottom, 1 x M32				
without cover				
with cable gland, IP54, ➞|Ø|⇐ 15 – 26.5 mm	BAS GUT GD 24H M32 A0	32	73.337.6435.0	1
with threaded collar	BAS GUT GD 24H M32 A1	32	73.337.6435.1	1
with cover				
with cable gland, IP54, ➞|Ø|⇐ 15 – 26.5 mm	BAS GUT GI 24H M32 A0	32	73.347.6435.0	1
with threaded collar	BAS GUT GI 24H M32 A1	32	73.347.6435.1	1

Technical data	
Material	Die cast aluminum alloy
Surface	powder coated
Locking levers	Handle: Polyamide, UL94-V0; stainless steel: V2A
Gasket	NBR
Degree of protection	
with latched locking levers	IP54
with appropriate cable glands	IP65
Temperature range	-40 … +120 °C

Description	Type	M	Part No.	P.U.
Accessories				
Cable gland IP68, plastic material, gray	Connection range 7 – 16 mm	25	Z5.507.1553.0	10
Cable gland IP68, nickel-plated brass	Connection range 11 – 18 mm	25	Z5.507.1521.0	10
Cable gland IP68, plastic material, gray	Connection range 10 – 21 mm	32	Z5.507.1753.0	10
Cable gland IP68, nickel-plated brass	Connection range 15 – 21 mm	32	Z5.507.1721.0	10
Cable gland IP68, plastic material, gray	Connection range 16 – 28 mm	40	Z5.507.1953.0	1
Cable gland IP68, nickel-plated brass	Connection range 19 – 27 mm	40	Z5.507.1921.0	1
Contact inserts				
See the product matrix			Page 24–25	

All Bases with "cable gland bottom" on this page are also available in M40 design.
Part numbers available on request.

Dimensions

Bases

closed, 2 cable glands

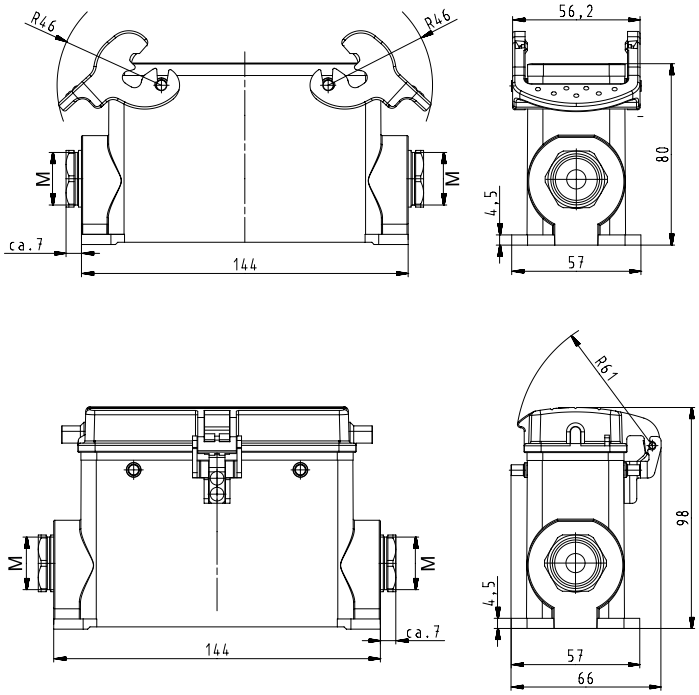

closed, 1 cable gland

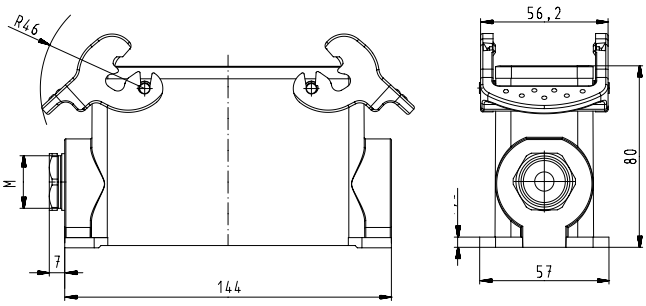

closed, 1 cable gland, bottom

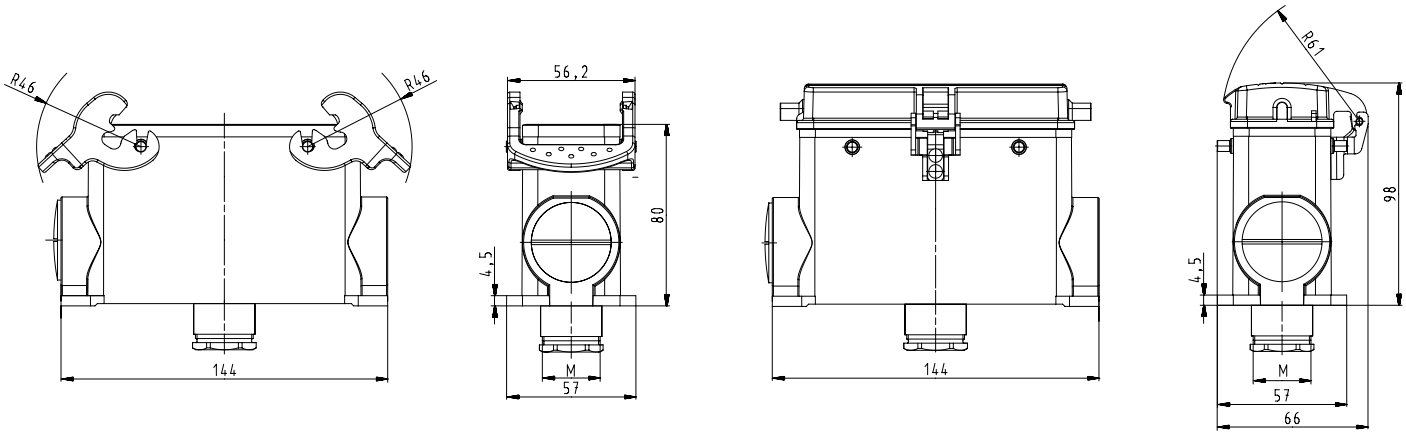

Hoods, double locking lever
Size 32

Hoods, Size 32

Lateral cable entry

Top cable entry

Description	Type	M	Part No.	P.U.
Hoods, size 32	**Aluminum housing**			
Lateral cable entry M32				
with cable gland, IP54, →|Ø|← 15 – 26,5 mm	BAS GOT GA 32 M32 A0	32	70.350.3235.0	1
with threaded collar	BAS GOT GA 32 M32 A1	32	70.350.3235.1	1
Lateral cable entry M40				
with threaded collar	BAS GOT GA 32 M40 A1	40	70.353.3235.1	1
Top cable entry M32				
with cable gland, IP54, →|Ø|← 15 – 26,5 mm	BAS GOT GC 32 M32 A0	32	70.352.3235.0	1
with threaded collar	BAS GOT GC 32 M32 A1	32	70.352.3235.1	1
Top cable entry M40				
with threaded collar	BAS GOT GC 32 M40 A1	40	70.354.3235.1	1

Technical data	
Material	Die cast aluminum alloy
Surface	powder coated
Locking levers	–
Gasket	–
Degree of protection	
with latched locking levers	IP54
with appropriate cable glands	IP65
Temperature range	-40 … +120 °C

Description	Type	M	Part No.	P.U.
Accessories				
Cable gland IP68, plastic material, gray	Connection range 10 – 21 mm	32	Z5.507.1753.0	10
Cable gland IP68, nickel-plated brass	Connection range 15 – 21 mm	32	Z5.507.1721.0	10
Cable gland IP68, plastic material, gray	Connection range 16 – 28 mm	40	Z5.507.1953.0	1
Cable gland IP68, nickel-plated brass	Connection range 19 – 27 mm	40	Z5.507.1921.0	1
Contact inserts				
See the product matrix			Page 24–25	

Dimensions

Hoods

Lateral cable entry

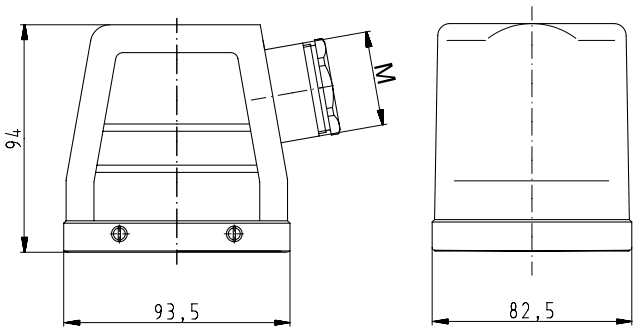

Top cable entry

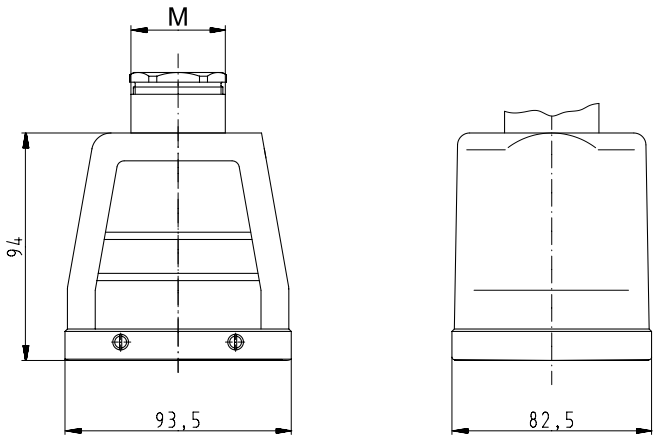

Bases, double locking lever
Size 32

Bases,
Size 32

open

Description	Type	M	Part No.	P.U.
Base, size 32	**Aluminum housing**			
open				
without cover	BAS GUT GA 32 A	32	70.320.3228.0	1

Technical data	
Material	Die cast aluminum alloy
Surface	powder coated
Locking levers	zinc-plated steel
Gasket	NBR
Degree of protection	
with latched locking levers	IP54
with appropriate cable glands	IP65
Temperature range	-40 … +120 °C

Contact inserts	
See the product matrix	Page 24–25

Dimensions

Bases

open

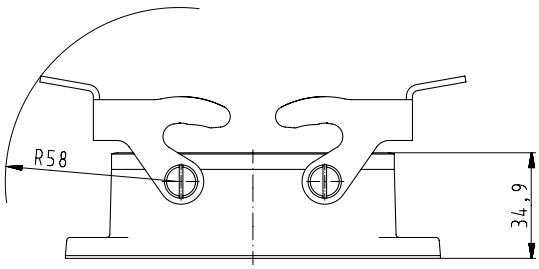

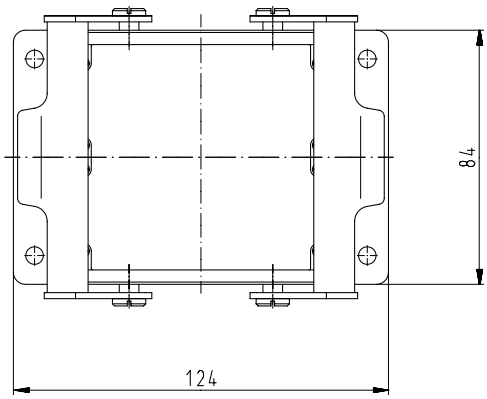

500 V / 690 V Hoods, single locking lever Size 48

Hoods, Size 48

Lateral cable entry

Top cable entry

Description	Type	M	Part No.	P.U.
500 V / 690 V Hoods, size 48	**Aluminum housing**			
Lateral cable entry M32				
with cable gland, IP54, ⇸Ø⇷ 15 – 26,5 mm	BAS GOT GG 48 M32 A0	32	70.350.4835.0	1
with threaded collar	BAS GOT GG 48 M32 A1	32	70.350.4835.1	1
Lateral cable entry M40				
with threaded collar	BAS GOT GG 48 M40 A1	40	70.353.4835.1	1
Top cable entry M32				
with cable gland, IP54, ⇸Ø⇷ 15 – 26,5 mm	BAS GOT GI 48 M32 A0	32	70.352.4835.0	1
with threaded collar	BAS GOT GI 48 M32 A1	32	70.352.4835.1	1
Top cable entry M40				
with threaded collar	BAS GOT GI 48 M40 A1	40	70.354.4835.1	1

Technical data	
Material	Die cast aluminum alloy
Surface	powder coated
Locking levers	–
Gasket	–
Degree of protection	
with latched locking levers	IP54
with appropriate cable glands	IP65
Temperature range	-40 … +120 °C

Description	Type	M	Part No.	P.U.
Accessories				
Cable gland IP68, plastic material, gray	Connection range 10 – 21 mm	32	Z5.507.1753.0	10
Cable gland IP68, nickel-plated brass	Connection range 15 – 21 mm	32	Z5.507.1721.0	10
Cable gland IP68, plastic material, gray	Connection range 16 – 28 mm	40	Z5.507.1953.0	1
Cable gland IP68, nickel-plated brass	Connection range 19 – 27 mm	40	Z5.507.1921.0	1
Contact inserts				
See the product matrix			Page 24–25	

Dimensions

Hoods

Lateral cable entry

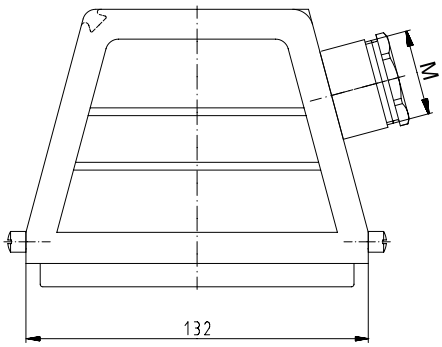

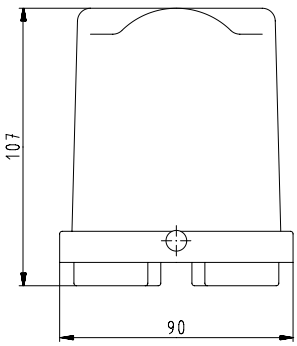

Top cable entry

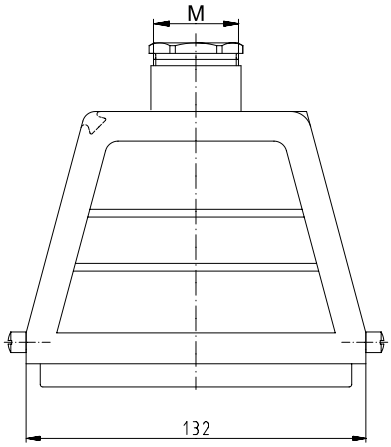

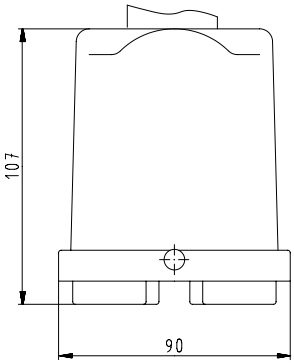

500 / 690 V Bases, single locking lever
Size 48

500 / 690 V Bases, Size 48

open

without cover
with cover

closed
1 cable gland

without cover
with cover

Description	Type	M	Part No.	P.U.
500 / 690 V Bases, size 48	**Aluminum housing**			
Open-bottom base				
without cover	BAS GUT GK 48 A		70.320.4828.0	1
with metal cover	BAS GUT GP 48 A		70.325.4828.0	1
Closed-bottom base				
1 cable glands left, 1 x M32				
without cover				
with cable gland, IP54, →|Ø|← 15– 26.5 mm	BAS GUT GM 48 M32 A0	32	70.331.4835.0	1
with threaded collar	BAS GUT GM 48 M32 A1	32	70.331.4835.1	1
with strain relief IP54	BAS GUT GM 48 M32 A3	32	70.331.4835.3	1
with metal cover				
with cable gland, IP54, →|Ø|← 15– 26.5 mm	BAS GUT GS 48 M32 A0	32	70.341.4835.1	1
with strain relief IP54	BAS GUT GS 48 M32 A3	32	70.341.4835.3	1
1 cable gland, left, 1 x M40				
with metal cover				
with threaded collar	BAS GUT GR 48 M40 A1	40	70.344.4835.1	1

Technical data	
Material	Die cast aluminum alloy
Surface	powder coated
Locking levers	zinc-plated steel
Gasket	NBR
Degree of protection	
with latched locking levers	IP54
with appropriate cable glands	IP65
Temperature range	-40 … +120 °C

Description	Type	M	Part No.	P.U.
Accessories				
Cable gland IP68, plastic material, gray	Connection range 10 – 21 mm	32	Z5.507.1753.0	10
Cable gland IP68, nickel-plated brass	Connection range 15 – 21 mm	32	Z5.507.1721.0	10
Cable gland IP68, plastic material, gray	Connection range 16 – 28 mm	40	Z5.507.1953.0	1
Cable gland IP68, nickel-plated brass	Connection range 19 – 27 mm	40	Z5.507.1921.0	1
Contact inserts				
See the product matrix			Page 24–25	

Dimensions

Bases

open

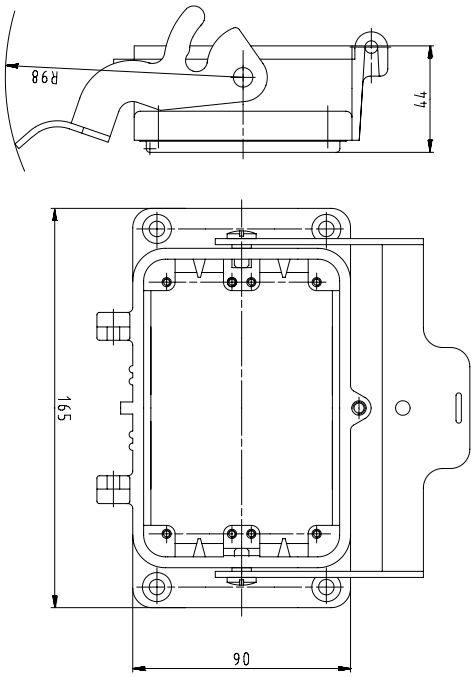

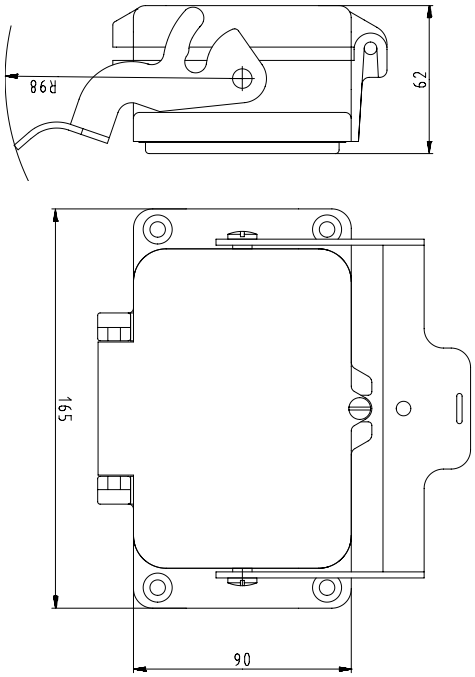

closed, 1 cable gland

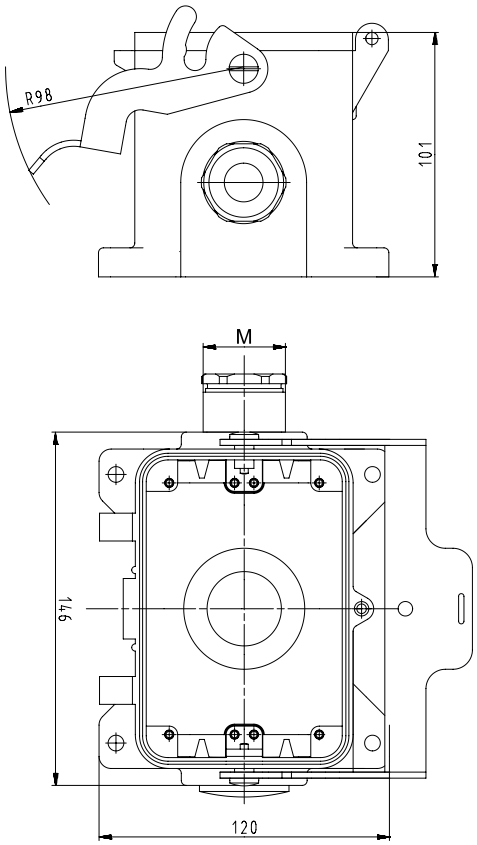

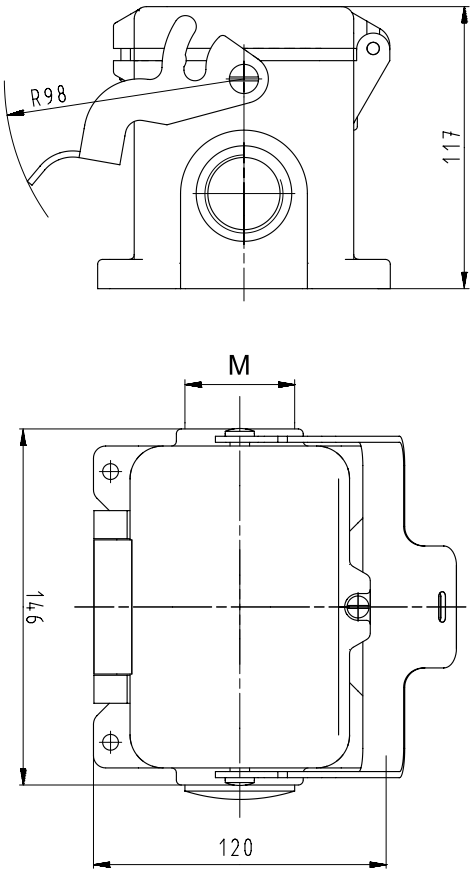

EMC Hoods, Size 6–24

EMC Hoods
Lateral cable entry

Size 6/6H

Size 24

Description	Type	M	Part No.	P.U.
EMC Hoods	**Aluminum housing**			
Lateral cable entry, size 6/6H				
with threaded collar M20	BAS GOE GG 6 M20 50 A1	20	70.350.0645.1	1
with threaded collar M25	BAS GOE GG 6 M25 50 A1	25	70.353.0645.1	1
with threaded collar M25, increased height design	BAS GOE GG 6H M25 50 A1	25	73.350.0645.1	1
with threaded collar M32, increased height design	BAS GOE GG 6H M32 50 A1	32	73.353.0645.1	1
Lateral cable entry, size 10/10H				
with threaded collar M25	BAS GOE GA 10 M25 50 A1	25	70.353.1045.1	1
with threaded collar M32, increased height design	BAS GOE GA 10H M32 50 A1	32	73.353.1045.1	1
Lateral cable entry, size 16/16H				
with threaded collar M32	BAS GOE GG 16 M32 50 A1	32	70.353.1645.1	1
with threaded collar M32, increased height design	BAS GOE GG 16H M32 50 A1	32	73.353.4045.1	1
Lateral cable entry, size 24/24H				
with threaded collar M32	BAS GOE GA 24 M32 50 A1	32	70.353.2445.1	1

Technical data	
Material	Die cast aluminum alloy
Surface	Special EMC plating, highly conductive
Locking levers	–
Gasket	–
Degree of protection	
with latched locking levers	–
with appropriate cable glands	IP65
Temperature range	-40 … +120 °C

Description	Type	M	Part No.	P.U.
Accessories				
Cable gland EMV IP68, nickel-plated brass	Connection range 7.5 – 14 mm	20	Z5.503.7221.0	10
Cable gland EMV IP68, nickel-plated brass	Connection range 10 – 18 mm	25	Z5.503.7321.0	10
Cable gland EMV IP68, nickel-plated brass	Connection range 16 – 25 mm	32	Z5.503.7421.0	10
Contact inserts				
See the product matrix			Page 24–25	

Dimensions

Hoods Lateral cable entry

Size 6 and 10

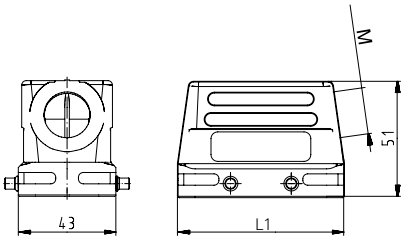

Size 6H and 10H

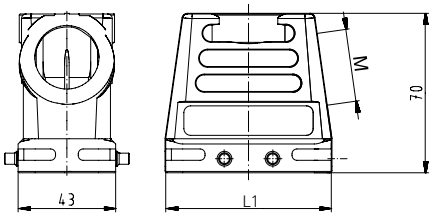

Size	L1 [mm]
6	60.0
6H	60.0
10	73.0
10H	73.0

Size 16 and 24

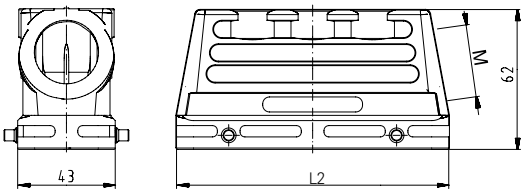

Size 16H

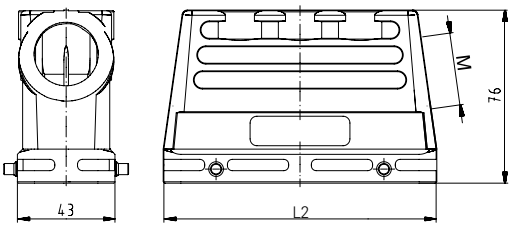

Size	L2 [mm]
16	93.5
16H	93.5
24	120.0

EMC Bases, Size 6–24

EMC Bases
open

Size 6

Size 24

Description	Type	M	Part No.	P.U.
EMC Bases	**Aluminum housing**			
Open				
Size 6	BAS GUE GK 6 50 A		70.320.0638.0	1
Size 10	BAS GUE GA 10 50 A		70.320.1038.0	1
Size 16	BAS GUE GA 16 50 A		70.320.1638.0	1
Size 24	BAS GUE GA 24 50 A		70.320.2438.0	1

Technical data	
Material	Die cast aluminum alloy
Surface	Special EMC plating, highly conductive
Locking levers	Steel
Gasket	–
Degree of protection	
with latched locking levers	–
with appropriate cable glands	IP65
Temperature range	-40 … +120 °C

Contact inserts	
See the product matrix	Page 24–25

Dimensions

Open-Bottom bases

Size 6

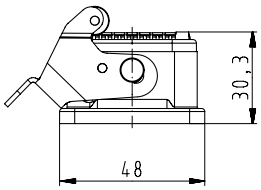

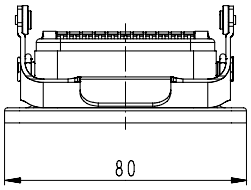

Size 10

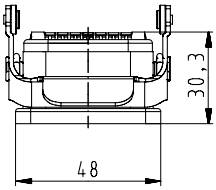

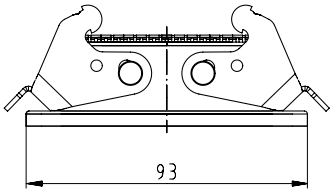

Size 16

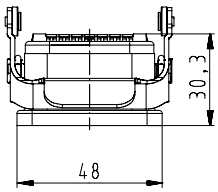

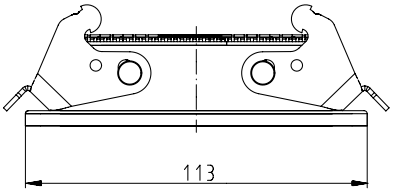

Size 24

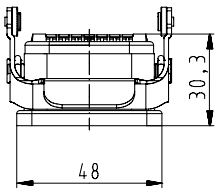

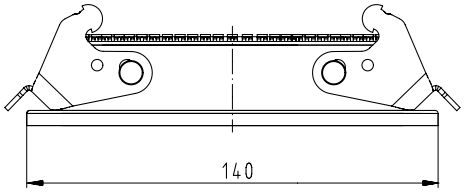

Motor connector housing, single locking lever
Size 10

Motor connector housing, single locking lever

Size 10

Description	Type	M	Part No.	P.U.
Motor connector housing, size 10				
Base open	BAS GUT GQ 10 A		71.321.1028.0	1

Technical data	
Material	Die cast aluminum alloy
Surface	powder coated
Locking levers	zinc-plated steel
Gasket at multipole connectors	NBR
Degree of protection	
with latched locking levers	IP 65
with appropriate cable glands	–
Temperature range	-40 … +120 °C

Dimensions

Size 10

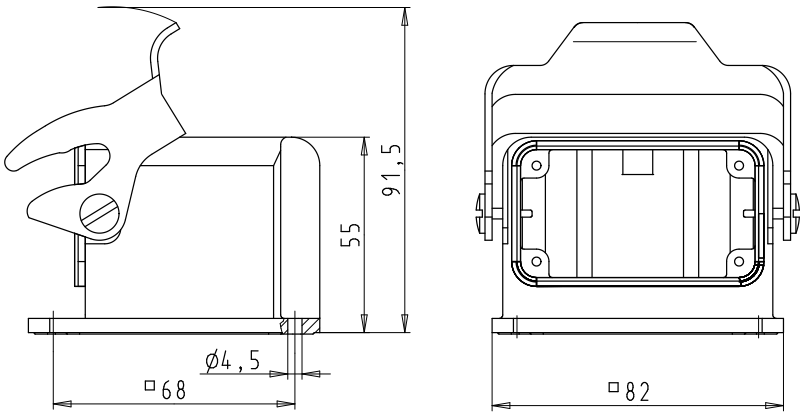

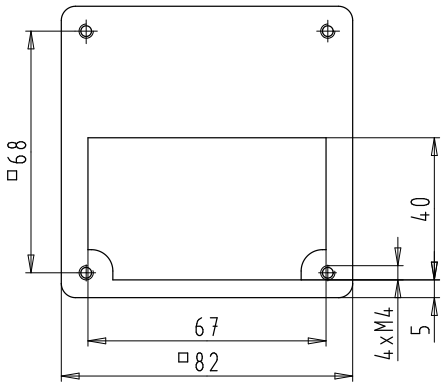

Robust and convenient

The connector series ***revos*** BASIC M was specifically designed for increased environmental requirements.

Plant construction and engineering as well as construction machinery or wind power stations have the highest requirements for industrial connectors: Vibration, intruding humidity and corrosion are only few of the stress factors electric connection technology has to stand up to. The ***revos*** BASIC M connectors are robust, durable and at the same time more convenient to use. The practical single locking lever lets you actuate the connectors safely even in confined spaces. The stainless steel locking levers are coated with heat-resistant, thermoplastic material. Ergonomic grip grooves provide better handling and ensure that the connector can be actuated under any ambient conditions. The movable locking bolts and the locking lever with rollers are also made of stainless steel and are very resistant to wear and abrasion.
The optional aluminum cover ensures increased flexibility on site and protects the connectors in case service is needed.

Single locking lever

Chemically stable sealing

Stainless steel lever and bolt

Requirements

- Vibration test acc. to DIN 60068-2-6 (10-150Hz/2g)
- Vibration test acc. to DIN EN 61373-1-B
- Methods of exposure to laboratory light sources acc. to DIN EN ISO 4892-2
- Ozone test acc. to DIN ISO 1431-1:2011-05
- Corrosion protection (NSS) of >2000 hrs according to DIN EN ISO 9227

Hoods, single locking lever
Size 6

Hoods
Size 6

Lateral cable entry

Top cable entry

Multipole connectors for cable-to-cable couplings

Description	Type	M	Part No.	P.U.
Hoods, size 6	**Aluminum housing**			
Lateral cable entry M20				
with threaded collar	BAS GOM GG 6 M20 B1	20	70.450.0637.1	1
Lateral cable entry M25				
with threaded collar	BAS GOM GG 6 M25 B1	25	70.453.0637.1	1
Top cable entry M20				
with threaded collar	BAS GOM GI 6 M20 B1	20	70.452.0637.1	1
Top cable entry M25				
with threaded collar	BAS GOM GI 6 M25 B1	25	70.454.0637.1	1
Multipole connectors for cable-to-cable couplings M20				
with threaded collar, locking levers and gasket	BAS GOM GL 6 M20 B1	20	70.472.0637.1	1
Technical data				
Material	Die cast aluminum alloy			
Surface	–			
Corrosion protection (NSS)	> 2000 hrs according to DIN EN ISO 9227			
Locking levers	–			
Gasket	–			
Degree of protection				
with appropriate cable glands	IP 66 according to DIN EN 60 529			
Protection class according to UL 50	NEMA Type 4/4X/12 (pending)			
Temperature range	-40 … +120 °C			

Description	Type	M	Part No.	P.U.
Accessories				
Cable gland IP68, nickel-plated brass	Connection range 8 – 13 mm	20	Z5.507.1321.0	10
Cable gland IP68, nickel-plated brass	Connection range 11 – 18 mm	25	Z5.507.1521.0	10

Dimensions

Lateral cable entry

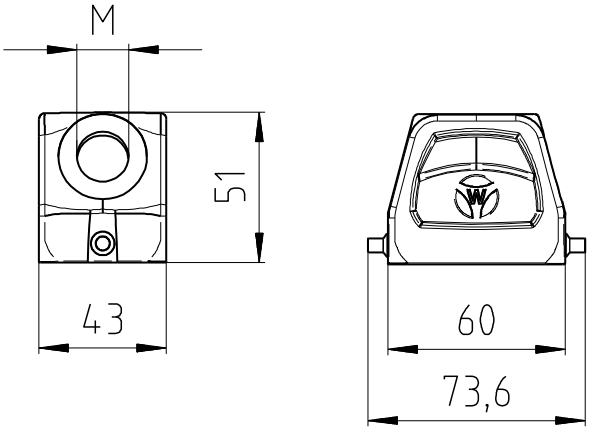

Top cable entry

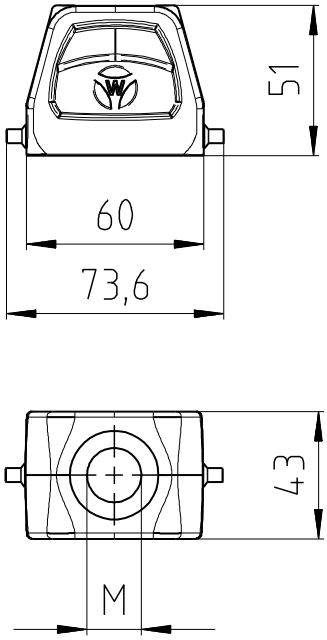

Multipole connectors for cable-to-cable couplings

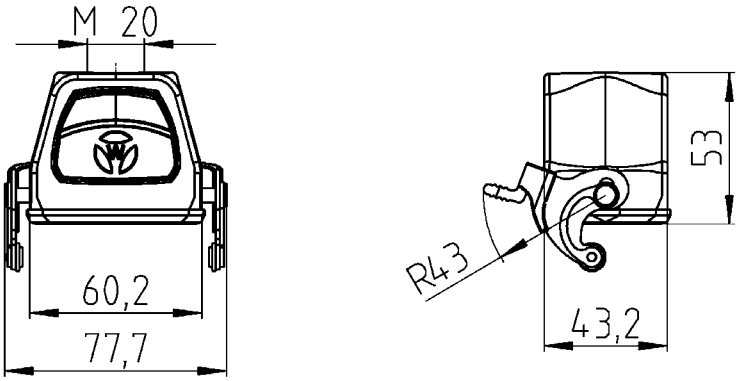

Bases, single locking lever
Size 6

Bases, Size 6

open

closed
2 x threaded collar

closed
1 x threaded collar, left

Description	Type	M	Part No.	P.U.
Bases, size 6	**Aluminum housing**			
Open-bottom base				
without cover	BAS GUM GK 6 B		70.420.0637.0	1
with metal cover	BAS GUM GP 6 B		70.425.0637.0	1
Closed-bottom base				
2 x threaded collar M20				
without cover	BAS GUM GL 6 M20 B1	20	70.430.0637.1	1
with metal cover	BAS GUM GR 6 M20 B1	20	70.440.0637.1	1
Closed-bottom base				
1 x threaded collar M20, left				
without cover	BAS GUM GM 6 M20 B1	20	70.431.0637.1	1
with metal cover	BAS GUM GS 6 M20 B1	20	70.441.0637.1	1
Closed-bottom base				
1 x threaded collar M25, left				
without cover	BAS GUM GM 6 M25 B1	25	70.435.0637.1	1

Technical data	
Material	Die cast aluminum alloy
Surface	–
Corrosion protection (NSS)	> 2000 hrs according to DIN EN ISO 9227
Locking levers	Handle: heatresistant thermoplastic Locking lever: stainless steel
Gasket	Fluorine Elastomer
Degree of protection	
with appropriate cable glands	IP 66 according to DIN EN 60 529
Protection class according to UL 50	NEMA Type 4/4X/12 (pending)
Temperature range	-40 … +120 °C

Description	Type	M	Part No.	P.U.
Accessories				
Cable gland IP68, nickel-plated brass	Connection range 8 – 13 mm	20	Z5.507.1321.0	10
Cable gland IP68, nickel-plated brass	Connection range 11 – 18 mm	25	Z5.507.1521.0	10

Dimensions

open
without cover

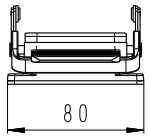

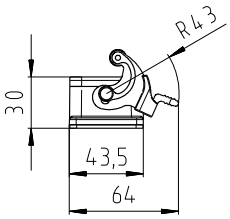

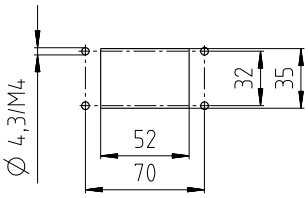

drilling template

with metal cover

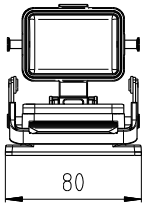

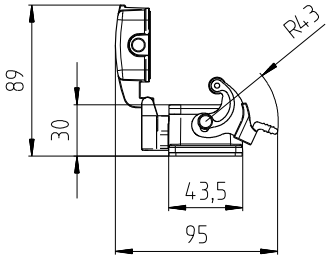

closed, 2 x threaded collar
without cover

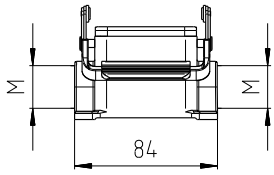

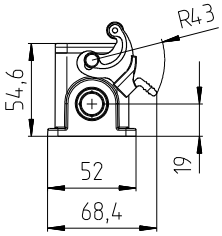

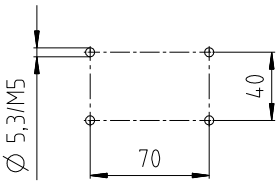

drilling template

with metal cover

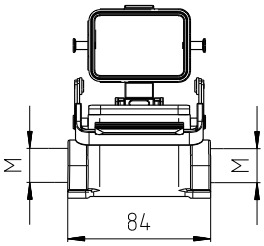

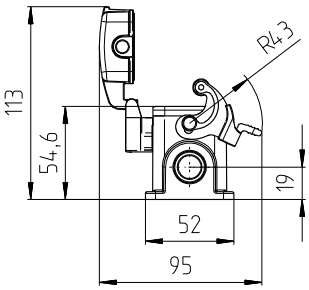

closed, 1 x threaded collar, left
without cover

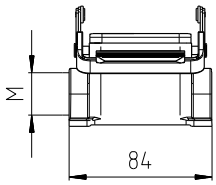

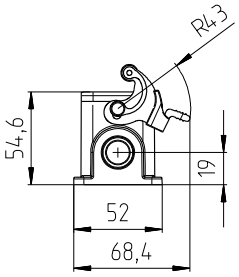

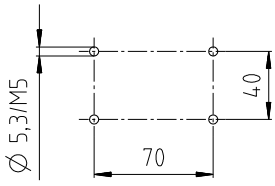

drilling template

with metal cover

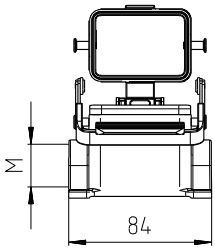

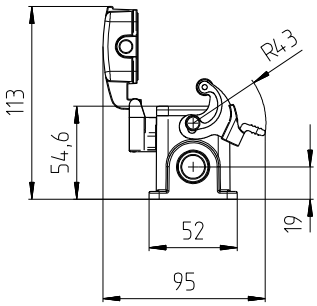

Hoods, single locking lever
Size 10

Hoods
Size 10

Lateral cable entry

Top cable entry

Multipole connectors for cable-to-cable couplings

Description	Type	M	Part No.	P.U.
Hoods, size 10	**Aluminum housing**			
Lateral cable entry M20				
with threaded collar	BAS GOM GG10 M20 B1	20	71.450.1037.1	1
Top cable entry M20				
with threaded collar	BAS GOM GI10 M20 B1	20	71.452.1037.1	1
Multipole connectors for cable-to-cable couplings M20				
with threaded collar, locking levers and gasket	BAS GOM GL10 M20 B1	20	71.472.1037.1	1

Technical data	
Material	Die cast aluminum alloy
Surface	–
Corrosion protection (NSS)	> 2000 hrs according to DIN EN ISO 9227
Locking levers	–
Gasket	–
Degree of protection	
with appropriate cable glands	IP 66 according to DIN EN 60 529
Protection class according to UL 50	NEMA Type 4/4X/12 (pending)
Temperature range	-40 … +120 °C

Description	Type	M	Part No.	P.U.
Accessories				
Cable gland IP68, nickel-plated brass	Connection range 8 – 13 mm	20	Z5.507.1321.0	10

Dimensions

Lateral cable entry

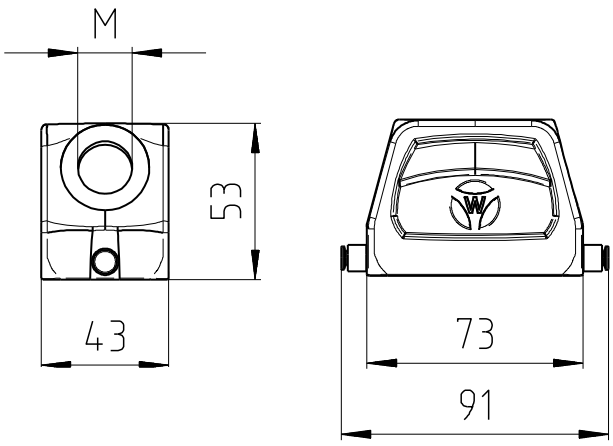

Top cable entry

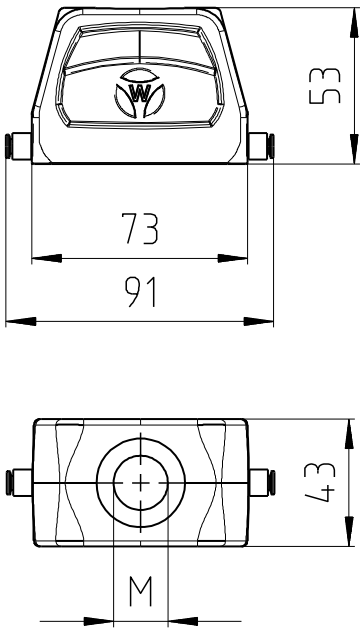

Multipole connectors for cable-to-cable couplings

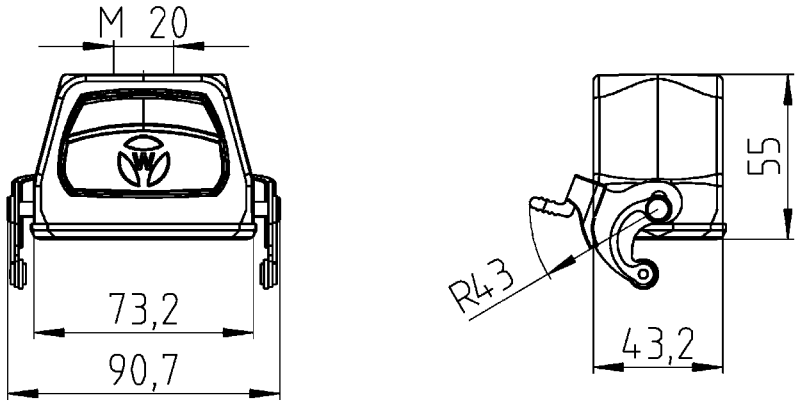

Bases, single locking lever
Size 10

Bases, Size 10

open

closed
2 x threaded collar

closed
1 x threaded collar, left

Description	Type	M	Part No.	P.U.
Bases, size 10	**Aluminum housing**			
Open-bottom base				
without cover	BAS GUM GK 10 B		71.420.1037.0	1
with metal cover	BAS GUM GP 10 B		71.425.1037.0	1
Closed-bottom base				
2 x threaded collar M20				
without cover	BAS GUM GL 10 M20 B1	20	71.430.1037.1	1
with metal cover	BAS GUM GR 10 M20 B1	20	71.440.1037.1	1
Closed-bottom base				
1 x threaded collar M20, left				
without cover	BAS GUM GM 10 M20 B1	20	71.431.1037.1	1
with metal cover	BAS GUM GS 10 M20 B1	20	71.441.1037.1	1

Technical data	
Material	Die cast aluminum alloy
Surface	–
Corrosion protection (NSS)	> 2000 hrs according to DIN EN ISO 9227
Locking levers	Handle: heatresistant thermoplastic Locking lever: stainless steel
Gasket	Fluorine Elastomer
Degree of protection	
with appropriate cable glands	IP 66 according to DIN EN 60 529
Protection class according to UL 50	NEMA Type 4/4X/12 (pending)
Temperature range	-40 … +120 °C

Description	Type	M	Part No.	P.U.
Accessories				
Cable gland IP68, nickel-plated brass	Connection range 8 – 13 mm	20	Z5.507.1321.0	10

Dimensions

open
without cover

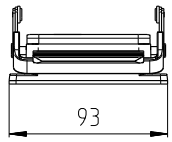

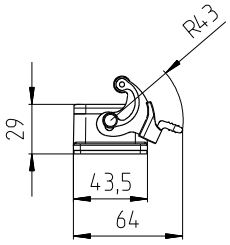

with metal cover

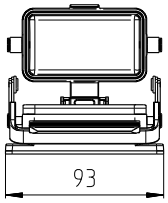

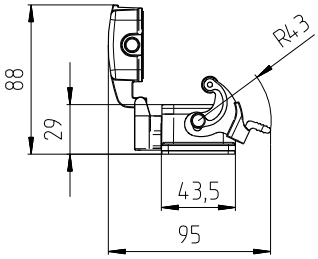

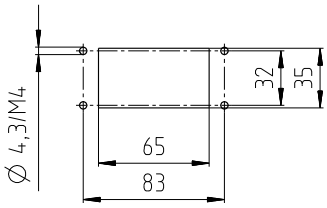

drilling template

---

closed, 2 x threaded collar
without cover

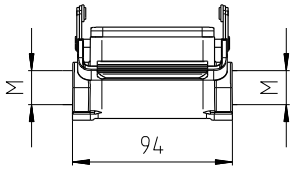

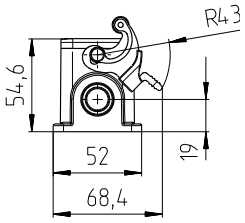

with metal cover

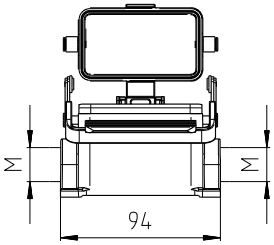

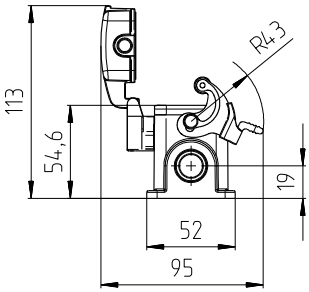

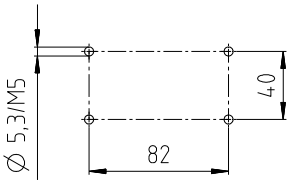

drilling template

---

closed, 1 x threaded collar, left
without cover

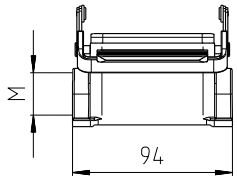

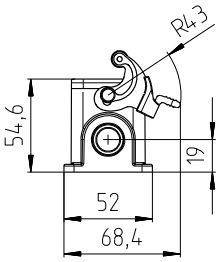

with metal cover

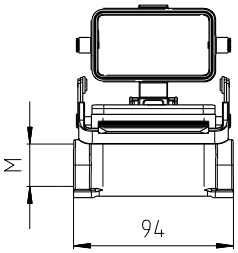

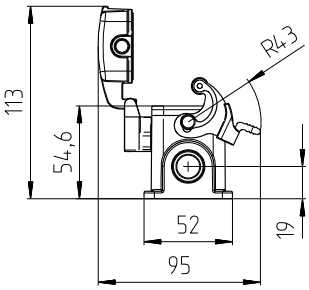

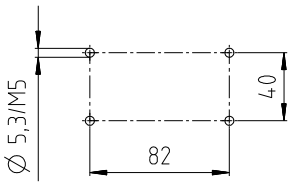

drilling template

Hoods, single locking lever
Size 16

Hoods
Size 16

Lateral cable entry

Top cable entry

Multipole connectors for cable-to-cable couplings

Description	Type	M	Part No.	P.U.
Hoods, size 16	**Aluminum housing**			
Lateral cable entry M25				
with threaded collar	BAS GOM GG16 M25 B1	25	71.450.1637.1	1
Lateral cable entry M32				
with threaded collar	BAS GOM GG16 M32 B1	32	71.453.1637.1	1
Top cable entry M25				
with threaded collar	BAS GOM GI16 M25 B1	25	71.452.1637.1	1
Multipole connectors for cable-to-cable couplings M25				
with threaded collar, locking levers and gasket	BAS GOM GL16 M25 B1	25	71.472.1637.1	1

Technical data	
Material	Die cast aluminum alloy
Surface	–
Corrosion protection (NSS)	> 2000 hrs according to DIN EN ISO 9227
Locking levers	–
Gasket	–
Degree of protection	
with appropriate cable glands	IP 66 according to DIN EN 60 529
Protection class according to UL 50	NEMA Type 4/4X/12 (pending)
Temperature range	-40 … +120 °C

Description	Type	M	Part No.	P.U.
Accessories				
Cable gland IP68, nickel-plated brass	Connection range 11 – 18 mm	25	Z5.507.1521.0	10
Cable gland IP68, nickel-plated brass	Connection range 15 – 21 mm	32	Z5.507.1721.0	10

Dimensions

Lateral cable entry

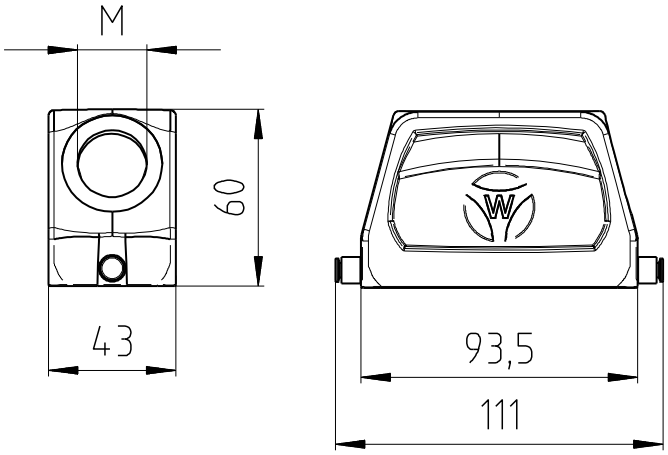

Top cable entry

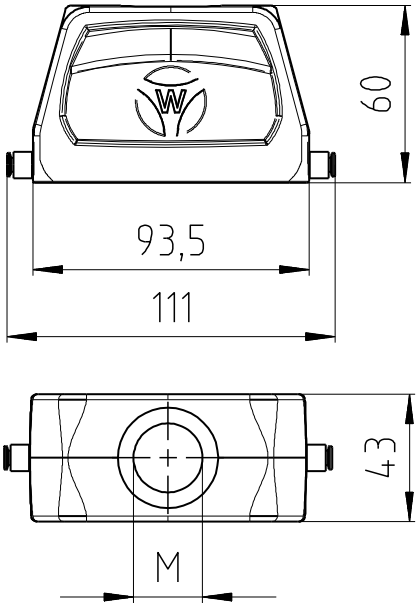

Multipole connectors for cable-to-cable couplings

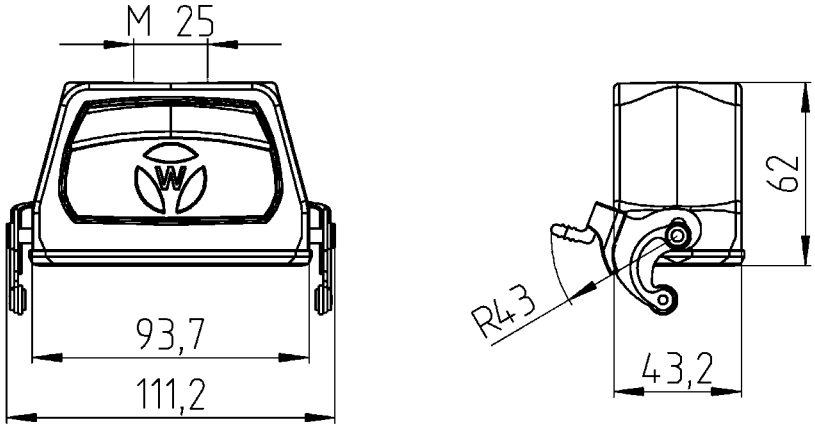

Bases, single locking lever
Size 16

Bases, Size 16

open

closed
2 x threaded collar

closed
1 x threaded collar, left

Description	Type	M	Part No.	P.U.
Bases, size 16	**Aluminum housing**			
Open-bottom base				
without cover	BAS GUM GK 16 B		71.420.1637.0	1
with metal cover	BAS GUM GP 16 B		71.425.1637.0	1
Closed-bottom base				
2 x threaded collar M25				
without cover	BAS GUM GL 16 M25 B1	25	71.430.1637.1	1
with metal cover	BAS GUM GR 16 M25 B1	25	71.440.1637.1	1
Closed-bottom base				
1 x threaded collar M25, left				
without cover	BAS GUM GM 16 M25 B1	25	71.431.1637.1	1
with metal cover	BAS GUM GS 16 M25 B1	25	71.441.1637.1	1
Closed-bottom base				
1 x threaded collar M25, right				
with metal cover	BAS GUM GT 16 M25 B1	25	71.442.1637.1	1
Closed-bottom base				
1 x threaded collar M25, bottom				
with metal cover	BAS GUM GU 16 M25 B1	25	71.443.1637.1	1

Technical data	
Material	Die cast aluminum alloy
Surface	–
Corrosion protection (NSS)	> 2000 hrs according to DIN EN ISO 9227
Locking levers	Handle: heatresistant thermoplastic Locking lever: stainless steel
Gasket	Fluorine Elastomer
Degree of protection	
with appropriate cable glands	IP 66 according to DIN EN 60 529
Protection class according to UL 50	NEMA Type 4/4X/12 (pending)
Temperature range	-40 … +120 °C

Description	Type	M	Part No.	P.U.
Accessories				
Cable gland IP68, nickel-plated brass	Connection range 11 – 18 mm	25	Z5.507.1521.0	10

Dimensions

open
without cover

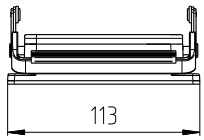

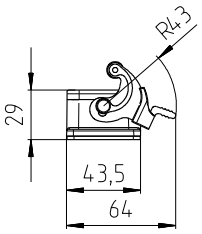

with metal cover

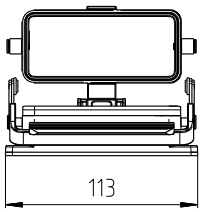

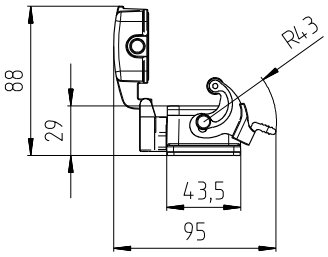

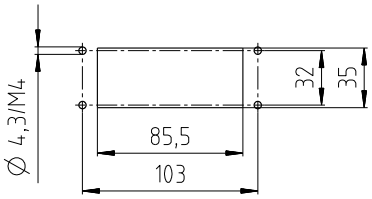

drilling template

---

closed, 2 x threaded collar
without cover

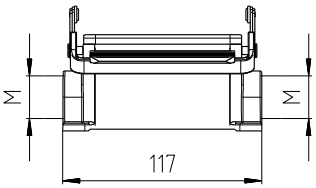

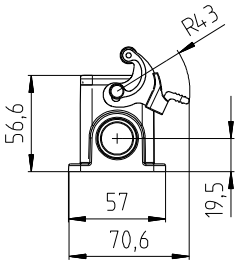

with metal cover

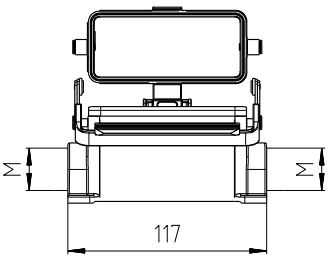

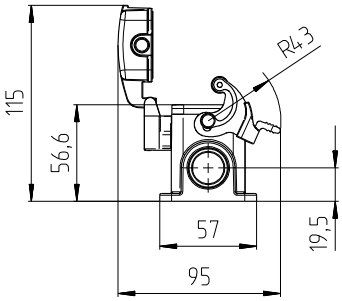

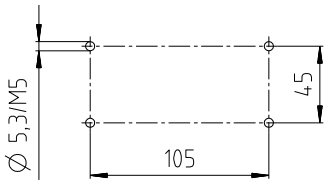

drilling template

---

closed, 1 x threaded collar, left
without cover

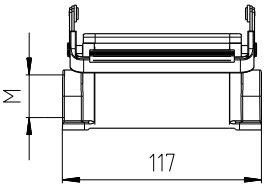

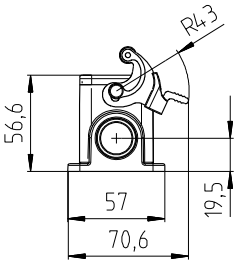

with metal cover

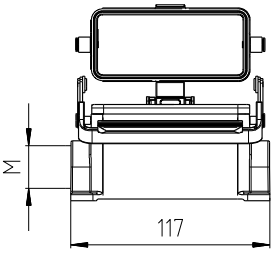

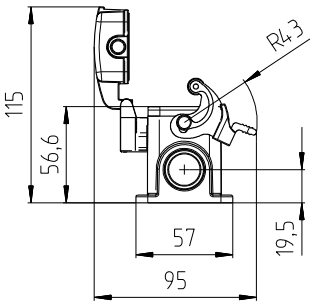

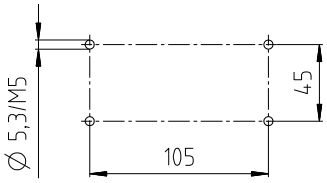

drilling template

Hoods, single locking lever
Size 24

Hoods
Size 24

Lateral cable entry

Top cable entry

Multipole connectors for cable-to-cable couplings

Description	Type	M	Part No.	P.U.
Hoods, size 24	**Aluminum housing**			
Lateral cable entry M25				
with threaded collar	BAS GOM GG24 M25 B1	25	71.450.2437.1	1
Top cable entry M25				
with threaded collar	BAS GOM GI24 M25 B1	25	71.452.2437.1	1
Multipole connectors for cable-to-cable couplings M25				
with threaded collar, locking levers and gasket	BAS GOM GL24 M25 B1	25	71.472.2437.1	1

Technical data	
Material	Die cast aluminum alloy
Surface	–
Corrosion protection (NSS)	> 2000 hrs according to DIN EN ISO 9227
Locking levers	–
Gasket	–
Degree of protection	
with appropriate cable glands	IP 66 according to DIN EN 60 529
Protection class according to UL 50	NEMA Type 4/4X/12 (pending)
Temperature range	-40 … +120 °C

Description	Type	M	Part No.	P.U.
Accessories				
Cable gland IP68, nickel-plated brass	Connection range 11 – 18 mm	25	Z5.507.1521.0	10

Dimensions

Lateral cable entry

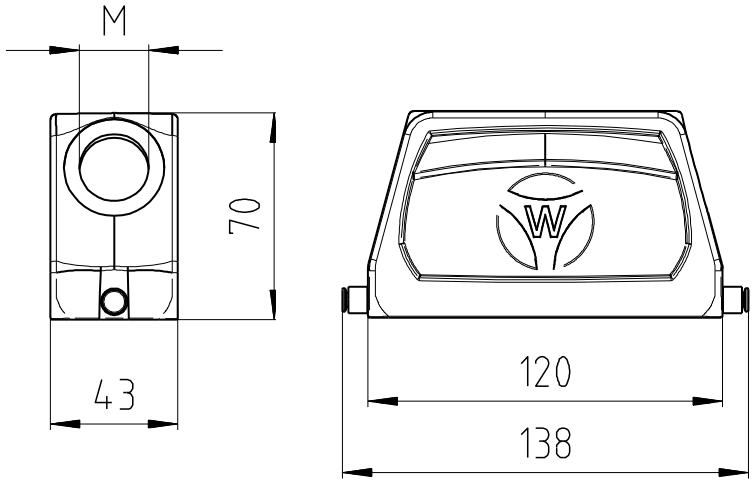

Top cable entry

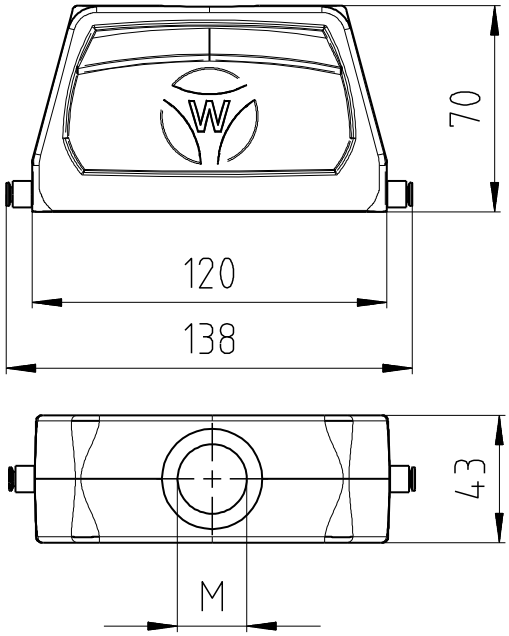

Multipole connectors for cable-to-cable couplings

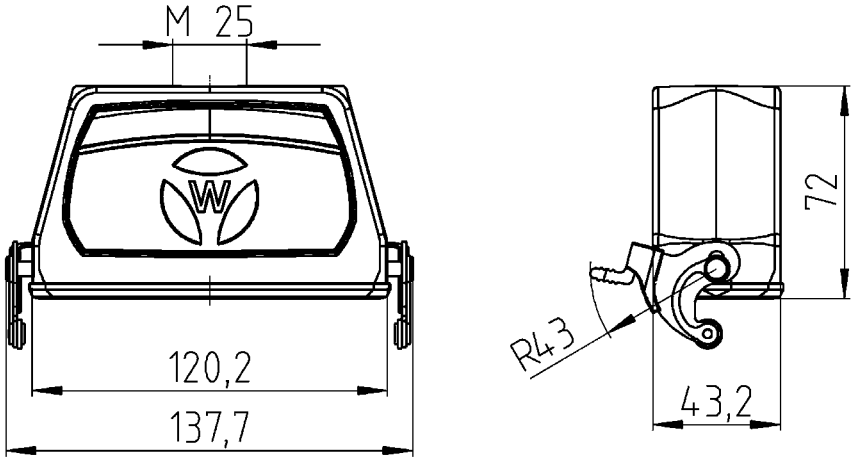

Bases, single locking lever
Size 24

Bases, Size 24

open

closed
2 x threaded collar

closed
1 x threaded collar, left

Description	Type	M	Part No.	P.U.
Bases, size 24	**Aluminum housing**			
Open-bottom base				
without cover	BAS GUM GK 24 B		71.420.2437.0	1
with metal cover	BAS GUM GP 24 B		71.425.2437.0	1
Closed-bottom base				
2 x threaded collar M25				
without cover	BAS GUM GL 24 M25 B1	25	71.430.2437.1	1
with metal cover	BAS GUM GR 24 M25 B1	25	71.440.2437.1	1
Closed-bottom base				
1 x threaded collar M25, left				
without cover	BAS GUM GM 24 M25 B1	25	71.431.2437.1	1
with metal cover	BAS GUM GS 24 M25 B1	25	71.441.2437.1	1

Technical data	
Material	Die cast aluminum alloy
Surface	–
Corrosion protection (NSS)	> 2000 hrs according to DIN EN ISO 9227
Locking levers	Handle: heatresistant thermoplastic Locking lever: stainless steel
Gasket	Fluorine Elastomer
Degree of protection	
with appropriate cable glands	IP 66 according to DIN EN 60 529
Protection class according to UL 50	NEMA Type 4/4X/12 (pending)
Temperature range	-40 … +120 °C

Description	Type	M	Part No.	P.U.
Accessories				
Cable gland IP68, nickel-plated brass	Connection range 11 – 18 mm	25	Z5.507.1521.0	10

Dimensions

open
without cover

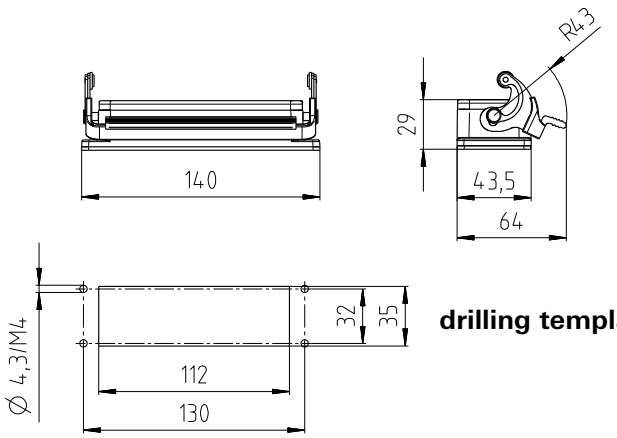

drilling template

with metal cover

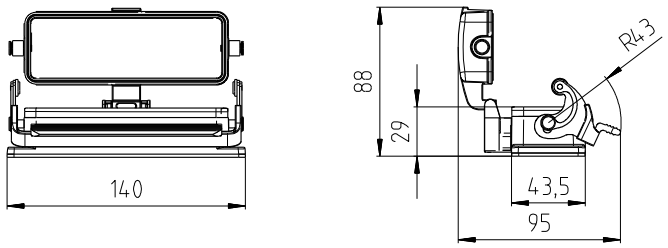

closed, 2 x threaded collar
without cover

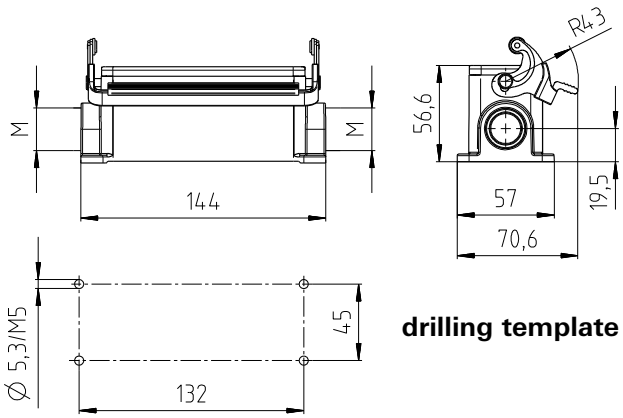

drilling template

with metal cover

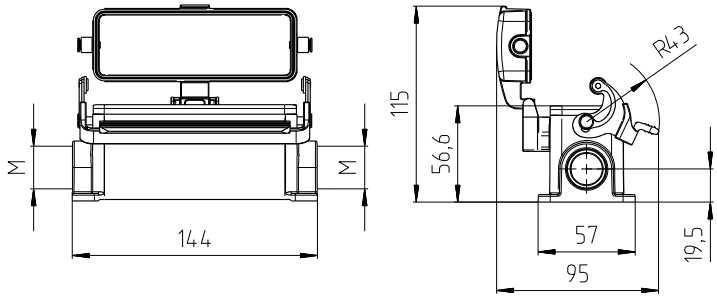

closed, 1 x threaded collar, left
without cover

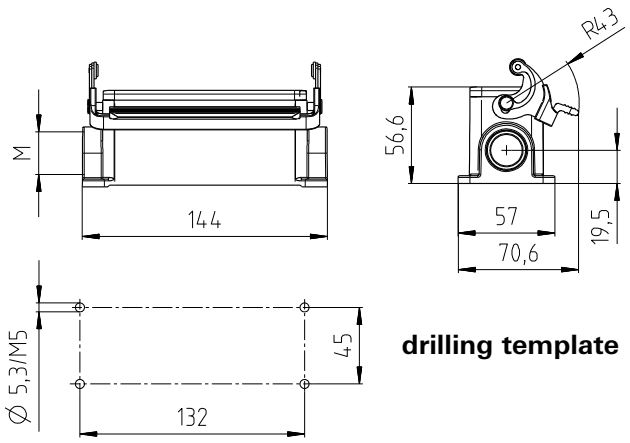

drilling template

with metal cover

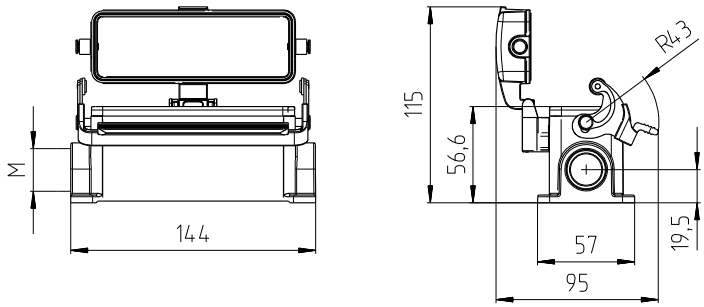

Hoods, single locking lever
Size 10/15

Hoods
Size 10/15

Lateral cable entry

Top cable entry

Multipole connectors for cable-to-cable couplings

Description	Type	M	Part No.	P.U.
Hoods, size 10/15	**Aluminum housing**			
Lateral cable entry M20				
with cable gland, IP54, ➞IØI⇜ 3 – 14.5 mm	HD GOT GG 15 M20 50 A0	20	76.350.1535.0	1
with intermediate support	HD GOT GG 15 M20 50 A2	20	76.350.1535.2	1
Lateral cable entry M25				
with cable gland, IP54, ➞IØI⇜ 7.5 – 19 mm	HD GOT GG 15 M25 50 A0	25	76.353.1535.0	1
with threaded collar	HD GOT GG 15 M25 50 A1	25	76.353.1535.1	1
with intermediate support	HD GOT GG 15 M25 50 A2	25	76.353.1535.2	1
Top cable entry M20				
with cable gland, IP54, ➞IØI⇜ 3 – 14.5 mm	HD GOT GI 15 M20 50 A0	20	76.352.1535.0	1
with threaded collar	HD GOT GI 15 M20 50 A1	20	76.352.1535.1	1
with intermediate support	HD GOT GI 15 M20 50 A2	20	76.352.1535.2	1
Top cable entry M25				
with cable gland, IP54, ➞IØI⇜ 7.5 – 19 mm	HD GOT GI 15 M25 50 A0	25	76.354.1535.0	1
with threaded collar	HD GOT GI 15 M25 50 A1	25	76.354.1535.1	1
with intermediate support	HD GOT GI 15 M25 50 A2	25	76.354.1535.2	1
Multipole connectors for cable-to-cable couplings M20				
with cable gland, IP54, ➞IØI⇜ 3 – 14.5 mm	HD GOT GI 15 M20 50 A0	20	76.352.1535.0	1
with cable gland, IP54, ➞IØI⇜ 3 – 14.5 mm and locking lever	HD GOT GL 15 M20 50 A0	20	76.372.1535.0	1
with threaded collar	HD GOT GI 15 M20 50 A1	20	76.352.1535.1	1
with threaded collar and locking lever	HD GOT GL 15 M20 50 A1	20	76.372.1535.1	1

Technical data	
Material	Die cast aluminum alloy
Surface	powder coated
Locking levers	–
Gasket	NBR
Degree of protection	
with latched locking levers	IP54
with appropriate cable glands	IP65
Temperature range	-40 … +120 °C

Description	Type	M	Part No.	P.U.
Accessories				
Cable gland IP68, plastic material, gray	Connection range 6 – 12 mm	20	Z5.507.1353.0	10
Cable gland IP68, nickel-plated brass	Connection range 8 – 13 mm	20	Z5.507.1321.0	10
Cable gland IP68, plastic material, gray	Connection range 7 – 16 mm	25	Z5.507.1553.0	10
Cable gland IP68, nickel-plated brass	Connection range 11 – 18 mm	25	Z5.507.1521.0	10
Contact inserts				
See the product matrix			Page 24–25	

Dimensions

Hoods

Lateral cable entry

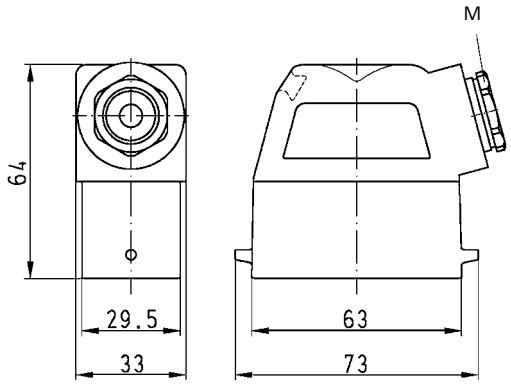

Top cable entry

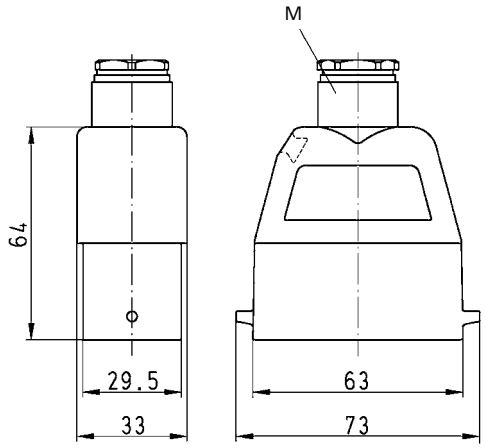

Multipole connectors for cable-to-cable couplings

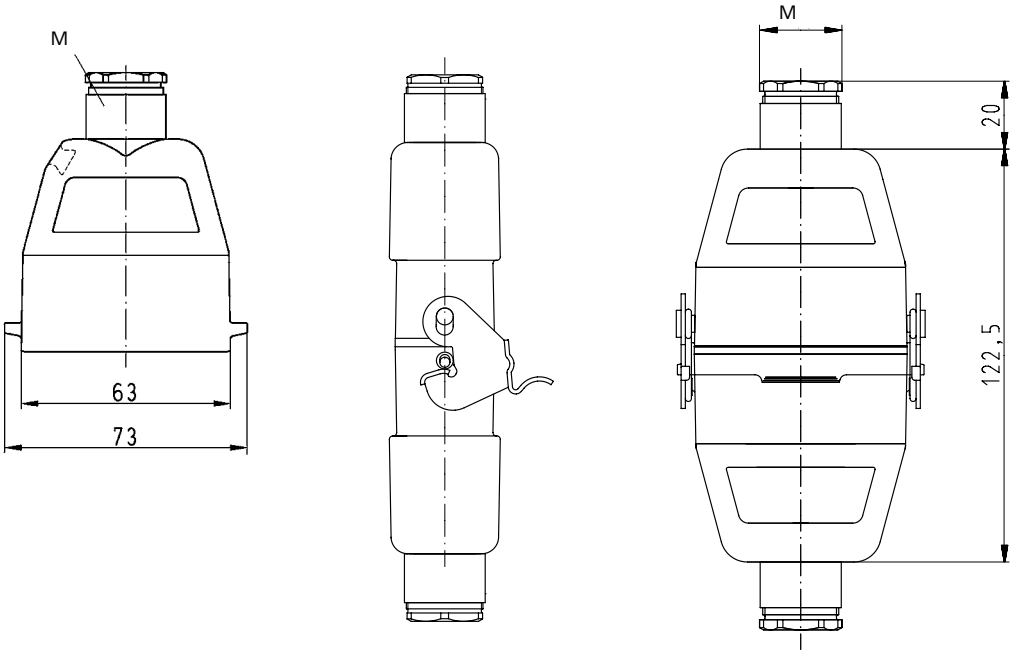

Bases, single locking lever
Size 10/15

Bases, Size 10/15

open
without cover
with cover

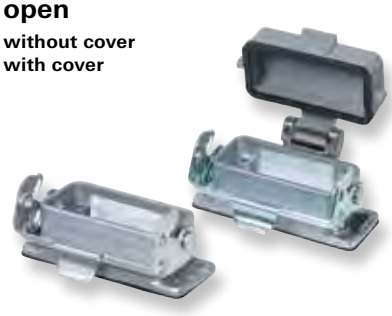

closed
1 cable gland
without cover
with cover

closed
1 cable gland, lateral cable entry
without cover
with cover

Description	Type	M	Part No.	P.U.
Bases, size 10/15	**Aluminum housing**			
Open-bottom base				
without cover	HD GUT GK 15 50 A		76.320.1528.0	1
with metal cover	HD GUT MP 15 50 A		76.425.1528.0	1
Closed-bottom base				
2 cable glands, 2 x M20				
without cover				
with cable gland, IP54, ⇒|Ø|⇐ 3 – 14.5 mm	HD GUT GL 15 M20 50 A0	20	76.330.1535.0	1
with threaded collar	HD GUT GL 15 M20 50 A1	20	76.330.1535.1	1
with metal cover				
with cable gland, IP54, ⇒|Ø|⇐ 3 – 14.5 mm	HD GUT GR 15 M20 50 A0	20	76.440.1535.0	1
with threaded collar	HD GUT GR 15 M20 50 A1	20	76.440.1535.1	1
2 cable glands, 2 x M25				
without cover				
with cable gland, IP54, ⇒|Ø|⇐ 7.5 – 19 mm	HD GUT GL 15 M25 50 A0	25	76.334.1535.0	1
with threaded collar	HD GUT GL 15 M25 50 A1	25	76.334.1535.1	1
with metal cover				
with cable gland, IP54, ⇒|Ø|⇐ 7.5 – 19 mm	HD GUT GR 15 M25 50 A0	25	76.444.1535.0	1
with threaded collar	HD GUT GR 15 M25 50 A1	25	76.444.1535.1	1
1 cable gland, left, 1 x M20				
without cover				
with cable gland, IP54, ⇒|Ø|⇐ 3 – 14.5 mm	HD GUT GM15 M20 50 A0	20	76.331.1535.0	1
with threaded collar	HD GUT GM15 M20 50 A1	20	76.331.1535.1	1
with metal cover				
with cable gland, IP54, ⇒|Ø|⇐ 3 – 14.5 mm	HD GUT MS 15 M20 50 A0	20	76.441.1535.0	1
with threaded collar	HD GUT MS 15 M20 50 A1	20	76.441.1535.1	1
1 cable gland, right, 1 x M20				
without cover				
with cable gland, IP54, ⇒|Ø|⇐ 3 – 14.5 mm	HD GUT GN 15 M20 50 A0	20	76.332.1535.0	1
with threaded collar	HD GUT GN 15 M20 50 A1	20	76.332.1535.1	1
with metal cover				
with cable gland, IP54, ⇒|Ø|⇐ 3 – 14.5 mm	HD GUT MN15 M20 50 A0	20	76.442.1535.0	1
with threaded collar	HD GUT MN15 M20 50 A1	20	76.442.1535.1	1
1 cable gland seitlich, left, 1 x M25				
without cover				
with cable gland, IP54, ⇒|Ø|⇐ 7.5 – 19 mm	HD GUT GM15 M25 50 A0	25	76.335.1535.0	1
with threaded collar	HD GUT GM15 M25 50 A1	25	76.335.1535.1	1
with metal cover				
with cable gland, IP54, ⇒|Ø|⇐ 7.5 – 19 mm	HD GUT MS 15 M25 50 A0	25	76.445.1535.0	1
with threaded collar	HD GUT MS 15 M25 50 A1	25	76.445.1535.1	1
1 cable gland seitlich, right, 1 x M25				
without cover				
with cable gland, IP54, ⇒|Ø|⇐ 7.5 – 19 mm	HD GUT GT 15 M25 50 A0	25	76.336.1535.0	1
with threaded collar	HD GUT GT 15 M25 50 A1	25	76.336.1535.1	1
with metal cover				
with cable gland, IP54, ⇒|Ø|⇐ 7.5 – 19 mm	HD GUT MN15 M25 50 A0	25	76.446.1535.0	1
with threaded collar	HD GUT MN15 M25 50 A1	25	76.446.1535.1	1

Technical data	
Material	Die cast aluminum alloy
Surface	powder coated
Locking levers	zinc-plated steel
Gasket	–
Degree of protection	
with latched locking levers	IP54
with appropriate cable glands	IP65
Temperature range	-40 … +120 °C

Description	Type	M	Part No.	P.U.
Accessories				
Cable gland IP68, plastic material, gray	Connection range 6 – 12 mm	20	Z5.507.1353.0	10
Cable gland IP68, nickel-plated brass	Connection range 8 – 13 mm	20	Z5.507.1321.0	10
Cable gland IP68, plastic material, gray	Connection range 7 – 16 mm	25	Z5.507.1553.0	10
Cable gland IP68, nickel-plated brass	Connection range 11 – 18 mm	25	Z5.507.1521.0	10
Contact inserts				
See the product matrix			Page 24–25	

Dimensions

Bases

open

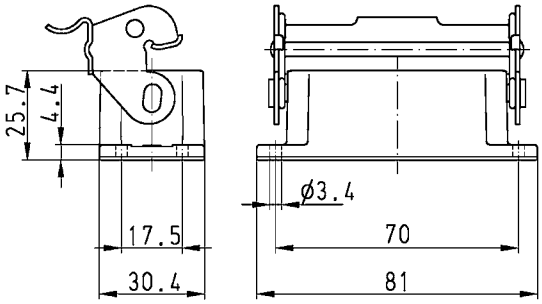

closed, 2 cable glands

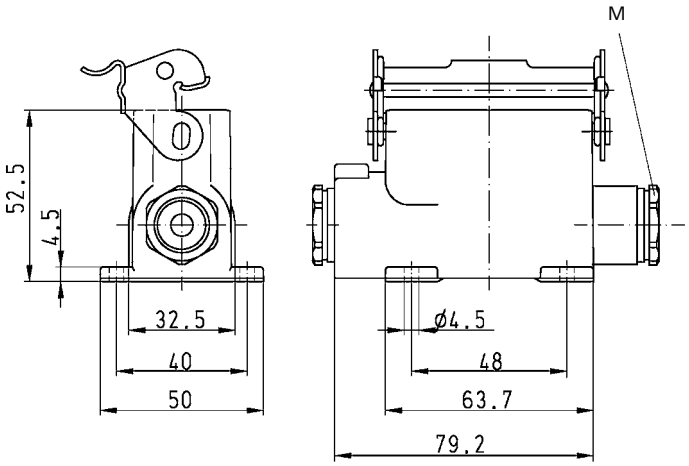

closed, 1 cable gland

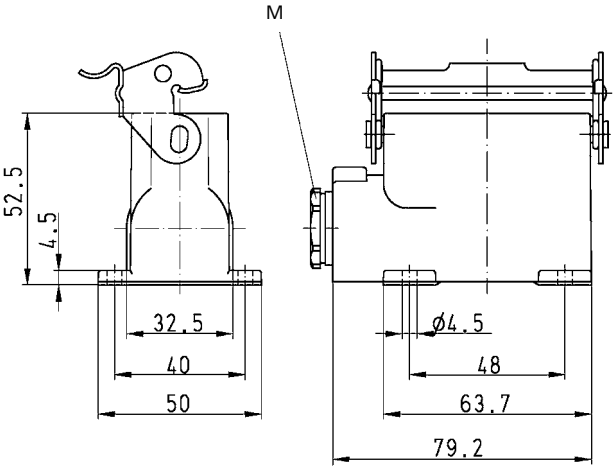

closed, 1 cable gland, lateral cable entry

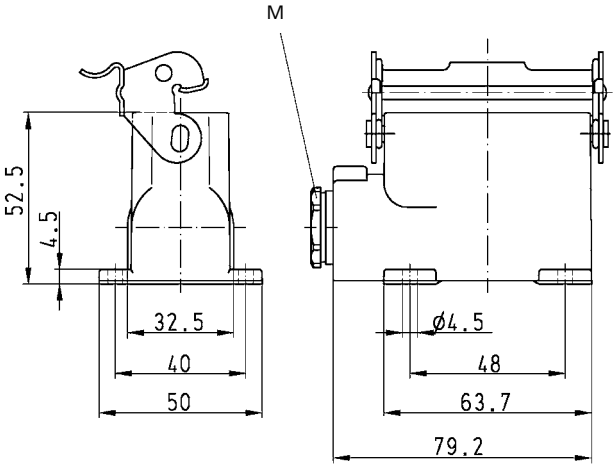

Hoods, single locking lever
Size 16/25

Hoods
Size 16/25

Lateral cable entry

Top cable entry

Multipole connectors for cable-to-cable couplings

Description	Type	M	Part No.	P.U.
Hoods, size 16/25	**Aluminum housing**			
Lateral cable entry M20				
with cable gland, IP54, ⇸IØI⇷ 3 – 14.5 mm	HD GOT GG 25 M20 50 A0	20	76.350.2535.0	1
with intermediate support	HD GOT GG 25 M20 50 A2	20	76.350.2535.2	1
Lateral cable entry M25				
with cable gland, IP54, ⇸IØI⇷ 7.5 – 19 mm	HD GOT GG 25 M25 50 A0	25	76.353.2535.0	1
with intermediate support	HD GOT GG 25 M25 50 A2	25	76.353.2535.2	1
Top cable entry M20				
with cable gland, IP54, ⇸IØI⇷ 3 – 14.5 mm	HD GOT GI 25 M20 50 A0	20	76.352.2535.0	1
with threaded collar	HD GOT GI 25 M20 50 A1	20	76.352.2535.1	1
Top cable entry M25				
with cable gland, IP54, ⇸IØI⇷ 7.5 – 19 mm	HD GOT GI 25 M25 50 A0	25	76.354.2535.0	1
with threaded collar	HD GOT GI 25 M25 50 A1	25	76.354.2535.1	1
Multipole connectors for cable-to-cable couplings M20				
with cable gland, IP54, ⇸IØI⇷ 3 – 14.5 mm	HD GOT GI 25 M20 50 A0	20	76.352.2535.0	1
with cable gland, IP54, ⇸IØI⇷ 3 – 14.5 mm and locking lever	HD GOT GL 25 M20 50 A0	20	76.372.2535.0	1
with threaded collar	HD GOT GI 25 M20 50 A1	20	76.352.2535.1	1
with threaded collar and locking lever	HD GOT GL 25 M20 50 A1	20	76.372.2535.1	1
Multipole connectors for cable-to-cable couplings M25				
with cable gland, IP54, ⇸IØI⇷ 7.5 – 19 mm	HD GOT GI 25 M25 50 A0	25	76.354.2535.0	1
with cable gland, IP54, ⇸IØI⇷ 7.5 – 19 mm and locking lever	HD GOT GL 25 M25 50 A0	25	76.374.2535.0	1

Technical data	
Material	Die cast aluminum alloy
Surface	powder coated
Locking levers at Multipole connectors	Steel
Gasket	NBR
Degree of protection	
with latched locking levers	IP54
with appropriate cable glands	IP65
Temperature range	-40 … +120 °C

Description	Type	M	Part No.	P.U.
Accessories				
Cable gland IP68, plastic material, gray	Connection range 6 – 12 mm	20	Z5.507.1353.0	10
Cable gland IP68, nickel-plated brass	Connection range 8 – 13 mm	20	Z5.507.1321.0	10
Cable gland IP68, plastic material, gray	Connection range 7 – 16 mm	25	Z5.507.1553.0	10
Cable gland IP68, nickel-plated brass	Connection range 11 – 18 mm	25	Z5.507.1521.0	10
Contact inserts				
See the product matrix			Page 24–25	

Dimensions

Hoods

Lateral cable entry

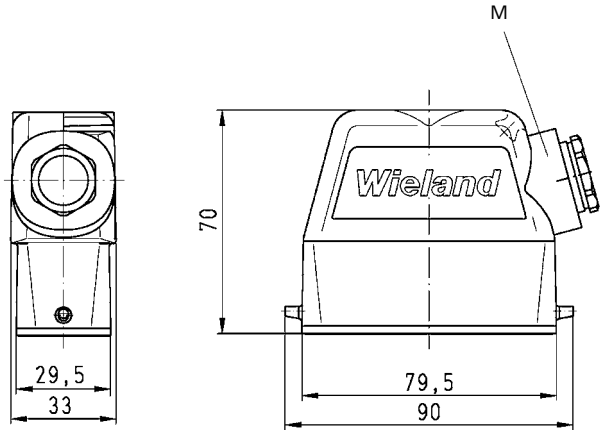

Top cable entry

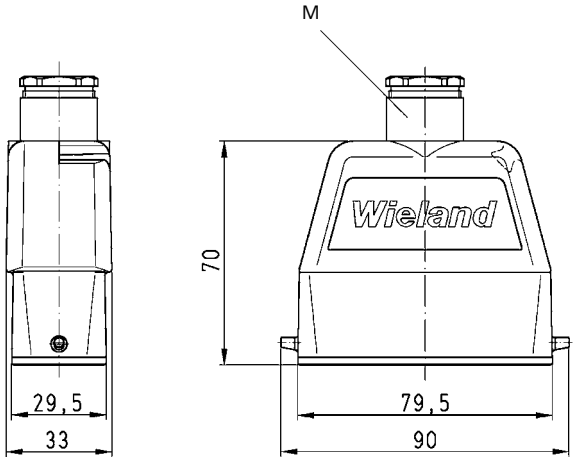

Multipole connectors for cable-to-cable couplings

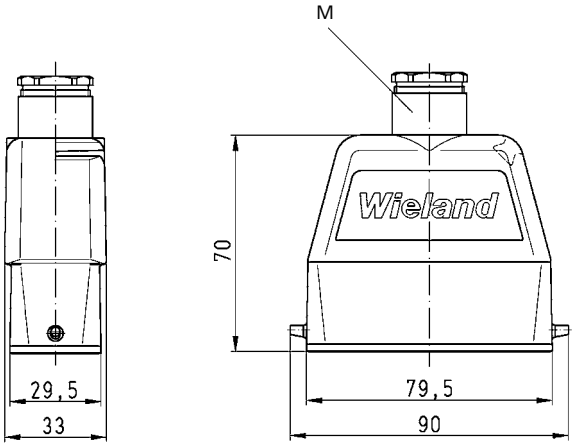

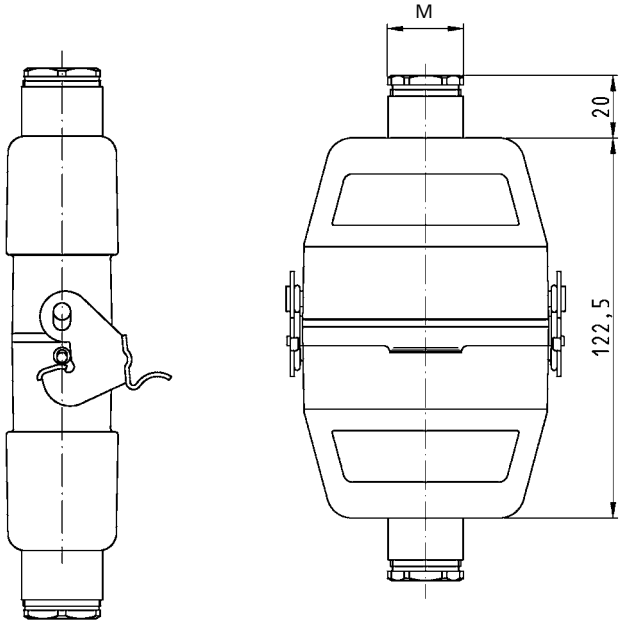

Bases, single locking lever
Size 16/25

Bases, Size 16/25

open

without cover
with cover

closed
1 cable gland

without cover
with cover

Description	Type	M	Part No.	P.U.
Bases, size 16/25	**Aluminum housing**			
Open-bottom base				
without cover	HD GUT GK 25 50 A		76.320.2528.0	1
mit plasticdeckel	HD GUT GP 25 50 A		76.325.2528.0	1
with metal cover	HD GUT MP 25 50 A		76.425.2528.0	1
Closed-bottom base				
2 cable glands, 2 x M20				
without cover				
with cable gland, IP54, ⇥I Ø I⇤ 3 – 14.5 mm	HD GUT GL 25 M20 50 A0	20	76.330.2535.0	1
with threaded collar	HD GUT GL 25 M20 50 A1	20	76.330.2535.1	1
with metal cover				
with cable gland, IP54, ⇥I Ø I⇤ 3 – 14.5 mm	HD GUT MR 25 M20 50 A0	20	76.440.2535.0	1
with threaded collar	HD GUT MR 25 M20 50 A1	20	76.440.2535.1	1
2 cable glands, 2 x M25				
without cover				
with cable gland, IP54, ⇥I Ø I⇤ 7.5 – 19 mm	HD GUT GL 25 M25 50 A0	25	76.334.2535.0	1
with threaded collar	HD GUT GL 25 M25 50 A1	25	76.334.2535.1	1
with metal cover				
with cable gland, IP54, ⇥I Ø I⇤ 7.5 – 19 mm	HD GUT MR 25 M25 50 A0	25	76.444.2535.0	1
with threaded collar	HD GUT MR 25 M25 50 A1	25	76.444.2535.1	1
1 cable gland, left, 1 x M20				
without cover				
with cable gland, IP54, ⇥I Ø I⇤ 3 – 14.5 mm	HD GUT GM 25 M20 50 A0	20	76.331.2535.0	1
with threaded collar	HD GUT GM 25 M20 50 A1	20	76.331.2535.1	1
with metal cover				
with cable gland, IP54, ⇥I Ø I⇤ 3 – 14.5 mm	HD GUT MS 25 M20 50 A0	20	76.441.2535.0	1
with threaded collar	HD GUT MS 25 M20 50 A1	20	76.441.2535.1	1
1 cable gland, right, 1 x M20				
with metal cover				
with cable gland, IP54, ⇥I Ø I⇤ 3 – 14.5 mm	HD GUT MN 25 M20 50 A0	20	76.442.2535.0	1
with threaded collar	HD GUT MN 25 M20 50 A1	20	76.442.2535.1	1
1 cable gland, left, 1 x M25				
without cover				
with cable gland, IP54, ⇥I Ø I⇤ 7.5 – 19 mm	HD GUT GM 25 M25 50 A0	25	76.335.2535.0	1
with threaded collar	HD GUT GM 25 M25 50 A1	25	76.335.2535.1	1
with metal cover				
with cable gland, IP54, ⇥I Ø I⇤ 7.5 – 19 mm	HD GUT MS 25 M25 50 A0	25	76.445.2535.0	1
with threaded collar	HD GUT MS 25 M25 50 A1	25	76.445.2535.1	1
1 cable gland, right, 1 x M25				
with metal cover				
with cable gland, IP54, ⇥I Ø I⇤ 7.5 – 19 mm	HD GUT MN 25 M25 50 A0	25	76.446.2535.0	1
with threaded collar	HD GUT MN 25 M25 50 A1	25	76.446.2535.1	1

Technical data	
Material	Die cast aluminum alloy
Surface	powder coated
Locking levers	zinc-plated steel
Gasket	–
Degree of protection	
with latched locking levers	IP54
with appropriate cable glands	IP65
Temperature range	-40 … +120 °C

Description	Type	M	Part No.	P.U.
Accessories				
Cable gland IP68, plastic material, gray	Connection range 6 – 12 mm	20	Z5.507.1353.0	10
Cable gland IP68, nickel-plated brass	Connection range 8 – 13 mm	20	Z5.507.1321.0	10
Cable gland IP68, plastic material, gray	Connection range 7 – 16 mm	25	Z5.507.1553.0	10
Cable gland IP68, nickel-plated brass	Connection range 11 – 18 mm	25	Z5.507.1521.0	10
Contact inserts				
See the product matrix			Page 24–25	

Dimensions

Bases

open with cover

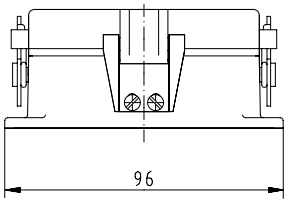

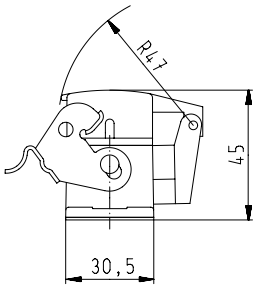

closed with cover, 2 cable glands

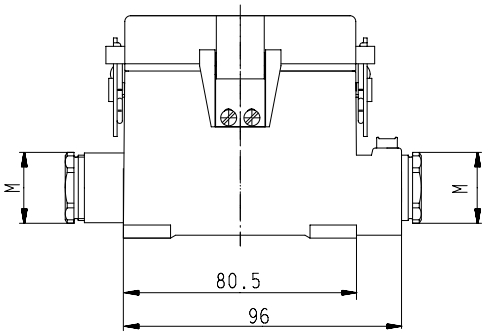

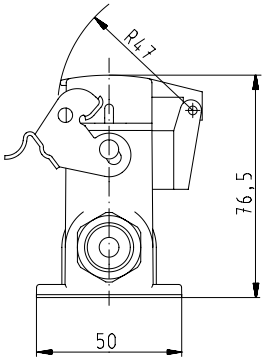

closed with cover, 1 cable gland

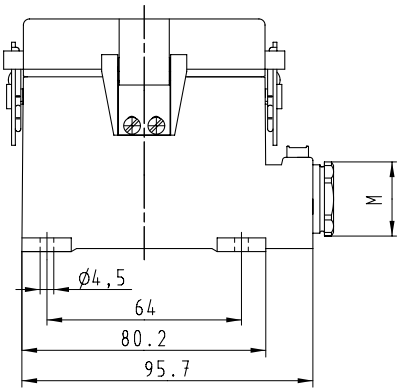

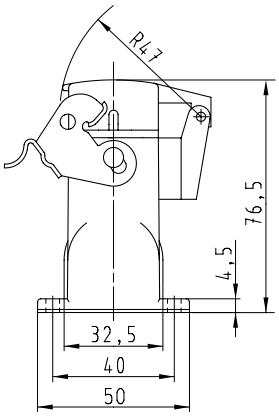

closed without cover, 1 cable gland

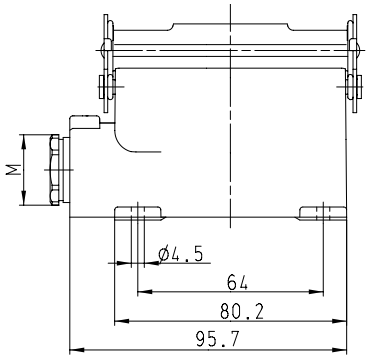

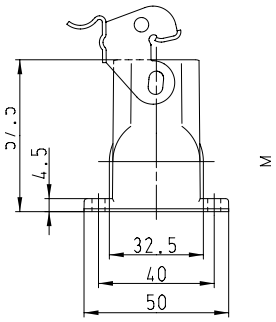

Hoods, double locking lever
Size 32/50

Hoods
Size 32/50

Lateral cable entry

Top cable entry

Multipole connectors for cable-to-cable couplings

Description	Type	M	Part No.	P.U.
Hoods, size 32/50	**Aluminum housing**			
Lateral cable entry M25				
with cable gland, IP54, →|Ø|← 7.5 – 19 mm	HD GOT GA 32 M25 69 A0	25	73.350.3235.0	1
with threaded collar	HD GOT GA 32 M25 69 A1	25	73.350.3235.1	1
Lateral cable entry M32				
with cable gland, IP54, →|Ø|← 15 – 26.5 mm	HD GOT GA 32 M32 69 A0	32	73.353.3235.0	1
with threaded collar	HD GOT GA 32 M32 69 A1	32	73.353.3235.1	1
Top cable entry M25				
with cable gland, IP54, →|Ø|← 7.5 – 19 mm	HD GOT GC 32 M25 69 A0	25	73.352.3235.0	1
with threaded collar	HD GOT GC 32 M25 69 A1	25	73.352.3235.1	1
Top cable entry M32				
with cable gland, IP54, →|Ø|← 15 – 26.5 mm	HD GOT GC 32 M32 69 A0	32	73.354.3235.0	1
with threaded collar	HD GOT GC 32 M32 69 A1	32	73.354.3235.1	1
Multipole connectors for cable-to-cable couplings M25				
with cable gland, IP54, →|Ø|← 7.5 – 19 mm	HD GOT GK 32 M25 69 A0	25	73.372.3235.0	1
with threaded collar	HD GOT GK 32 M25 69 A1	25	73.372.3235.1	1
Multipole connectors for cable-to-cable couplings M32				
with cable gland, IP54, →|Ø|← 15 – 26.5 mm	HD GOT GK 32 M32 69 A0	32	73.374.3235.0	1
with threaded collar	HD GOT GK 32 M32 69 A1	32	73.374.3235.1	1

Technical data	
Material	Die cast aluminum alloy
Surface	powder coated
Locking levers	zinc-plated steel
Gasket	NBR
Degree of protection	
with latched locking levers	IP54
with appropriate cable glands	IP65
Temperature range	-40 … +120 °C

Description	Type	M	Part No.	P.U.
Accessories				
Cable gland IP68, plastic material, gray	Connection range 7 – 16 mm	25	Z5.507.1553.0	10
Cable gland IP68, nickel-plated brass	Connection range 11 – 18 mm	25	Z5.507.1521.0	10
Cable gland IP68, plastic material, gray	Connection range 10 – 21 mm	32	Z5.507.1753.0	10
Cable gland IP68, nickel-plated brass	Connection range 15 – 21 mm	32	Z5.507.1721.0	10
Contact inserts				
See the product matrix			Page 24–25	

Dimensions

Hoods

Lateral cable entry

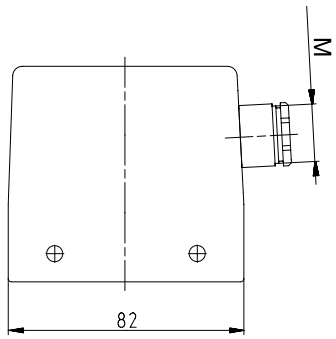

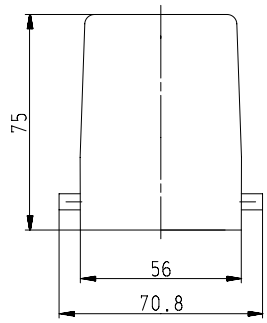

Top cable entry

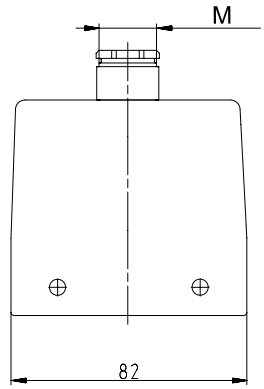

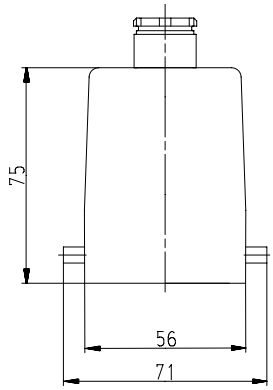

Multipole connectors for cable-to-cable couplings

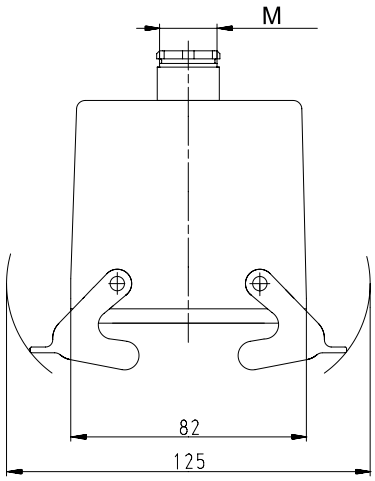

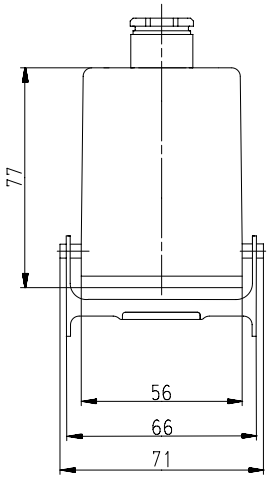

Hoods, double locking lever with Locking levers, Size 32/50

Hoods
Size 32/50

Lateral cable entry

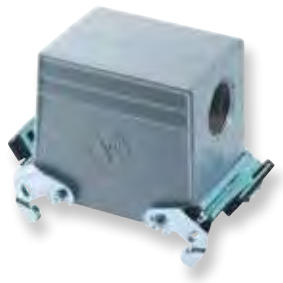

Top cable entry

Description	Type	M	Part No.	P.U.
Hoods, size 32/50	**Aluminum housing**			
Lateral cable entry M25				
with cable gland, IP54, →|Ø|← 7.5 – 19 mm	HD GOT GD 32 M25 69 A0	25	73.355.3235.0	1
with threaded collar	HD GOT GD 32 M25 69 A1	25	73.355.3235.1	1
Lateral cable entry M32				
with cable gland, IP54, →|Ø|← 15 – 26.5 mm	HD GOT GD 32 M32 69 A0	32	73.358.3235.0	1
with threaded collar	HD GOT GD 32 M32 69 A1	32	73.358.3235.1	1
Top cable entry M25				
with threaded collar	HD GOT GF 32 M25 69 A1	25	73.357.3235.1	1
Top cable entry M32				
with threaded collar	HD GOT GF 32 M32 69 A1	32	73.359.3235.1	1

Technical data	
Material metal/plastic	Die cast aluminum alloy
Surface	powder coated
Locking levers	zinc-plated steel
Gasket	NBR
Degree of protection	
with latched locking levers	IP54
with appropriate cable glands	IP65
Temperature range	-40 … +120 °C

Description	Type	M	Part No.	P.U.
Accessories				
Cable gland IP68, plastic material, gray	Connection range 7 – 16 mm	25	Z5.507.1553.0	10
Cable gland IP68, nickel-plated brass	Connection range 11 – 18 mm	25	Z5.507.1521.0	10
Cable gland IP68, plastic material, gray	Connection range 10 – 21 mm	32	Z5.507.1753.0	10
Cable gland IP68, nickel-plated brass	Connection range 15 – 21 mm	32	Z5.507.1721.0	10
Contact inserts				
See the product matrix			Page 24–25	

Dimensions

Hoods with Locking levers
Lateral cable entry

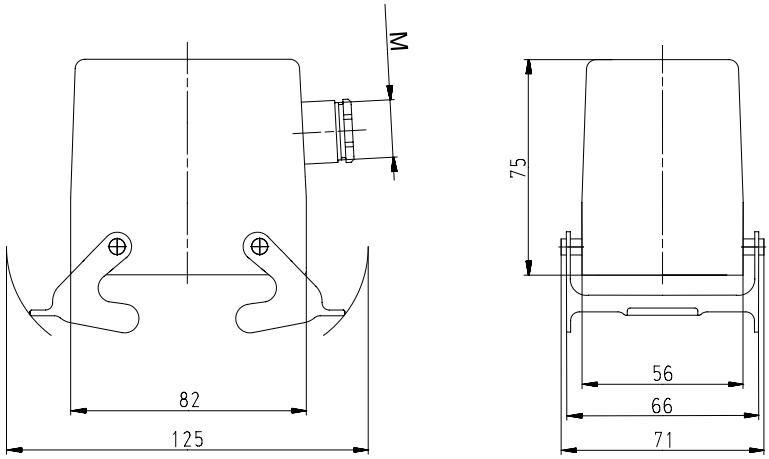

Top cable entry

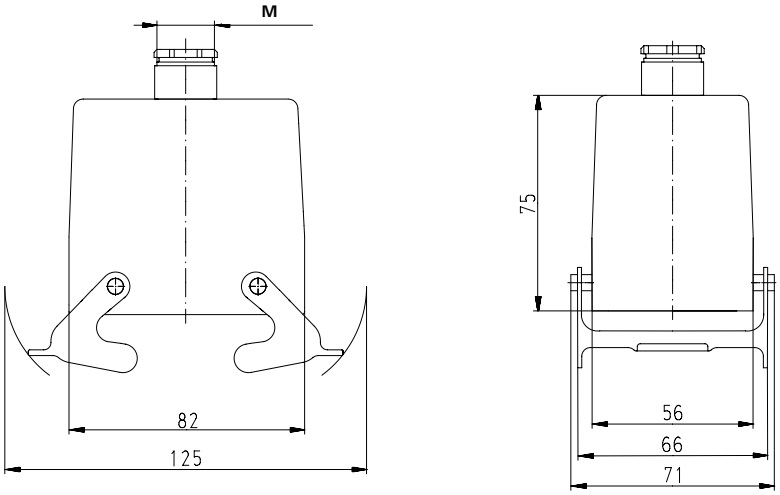

Bases, double locking lever
Size 32/50

Bases, Size 32/50

open
without cover
with cover

closed
2 cable glands
without cover
with cover

closed
1 cable gland
without cover
with cover

Description	Type	M	Part No.	P.U.
Bases, size 32/50	**Aluminum housing**			
Open-bottom base				
without cover	HD GUT GA 32 69 A		73.320.3228.0	1
with metal cover	HD GUT GE 32 69 A		73.325.3228.0	1
Closed-bottom base				
2 cable glands, 2 x M25				
without cover				
with cable gland, IP54, ⇸I Ø I⇷ 7.5 – 19 mm	HD GUT GB 32 M25 69 A0	25	73.330.3235.0	1
with threaded collar	HD GUT GB 32 M25 69 A1	25	73.330.3235.1	1
with metal cover				
with threaded collar	HD GUT GF 32 M25 69 A1	25	73.340.3235.1	1
2 cable glands, 2 x M32				
without cover				
with threaded collar	HD GUT GB 32 M32 69 A1	32	73.334.3235.1	1
with metal cover				
with threaded collar	HD GUT GF 32 M32 69 A1	32	73.344.3235.1	1
1 cable gland, left, 1 x M25				
without cover				
with cable gland, IP54, ⇸I Ø I⇷ 7.5 – 19 mm	HD GUT GC 32 M25 69 A0	25	73.331.3235.0	1
with threaded collar	HD GUT GC 32 M25 69 A1	25	73.331.3235.1	1
with metal cover				
with cable gland, IP54, ⇸I Ø I⇷ 7.5 – 19 mm	HD GUT GH 32 M25 69 A0	25	73.342.3235.0	1
with threaded collar	HD GUT GH 32 M25 69 A1	25	73.342.3235.1	1
1 cable gland, left, 1 x M32				
without cover				
with cable gland, IP54, ⇸I Ø I⇷ 15 – 26.5 mm	HD GUT GC 32 M32 69 A0	32	73.335.3235.0	1
with threaded collar	HD GUT GC 32 M32 69 A1	32	73.335.3235.1	1
with metal cover				
with threaded collar	HD GUT GH 32 M32 69 A1	32	73.346.3235.1	1

Technical data	
Material	Die cast aluminum alloy
Surface	powder coated
Locking levers	zinc-plated steel
Gasket	NBR
Degree of protection	
with latched locking levers	IP54
with appropriate cable glands	IP65
Temperature range	-40 … +120 °C

Description	Type	M	Part No.	P.U.
Accessories				
Cable gland IP68, plastic material, gray	Connection range 7 – 16 mm	25	Z5.507.1553.0	10
Cable gland IP68, nickel-plated brass	Connection range 11 – 18 mm	25	Z5.507.1521.0	10
Cable gland IP68, plastic material, gray	Connection range 10 – 21 mm	32	Z5.507.1753.0	10
Cable gland IP68, nickel-plated brass	Connection range 15 – 21 mm	32	Z5.507.1721.0	10
Contact inserts				
See the product matrix			Page 24–25	

Dimensions

Bases, with and without Locking levers

open

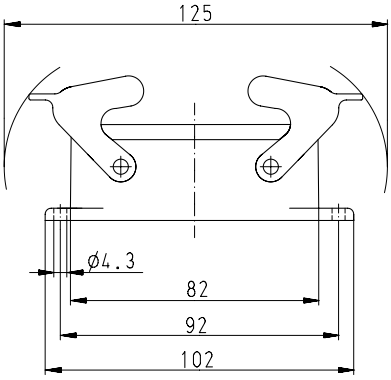

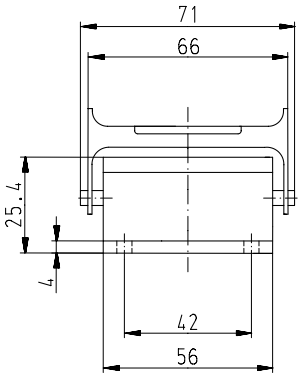

closed, 2 cable glands

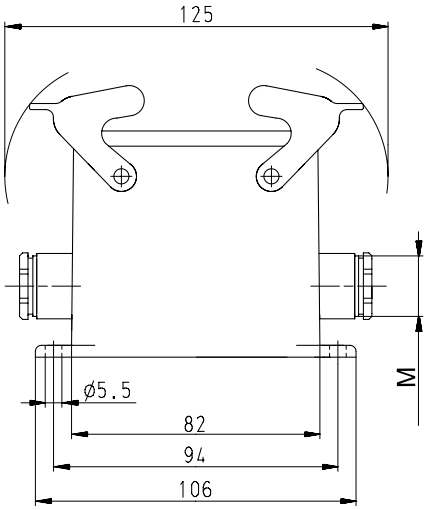

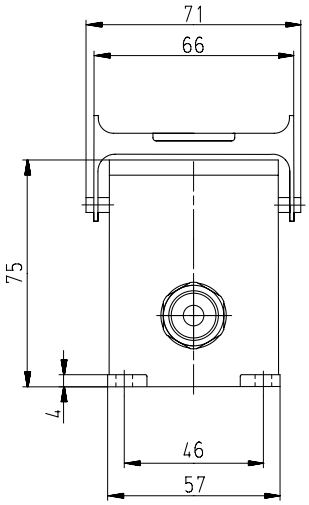

closed, 1 cable gland

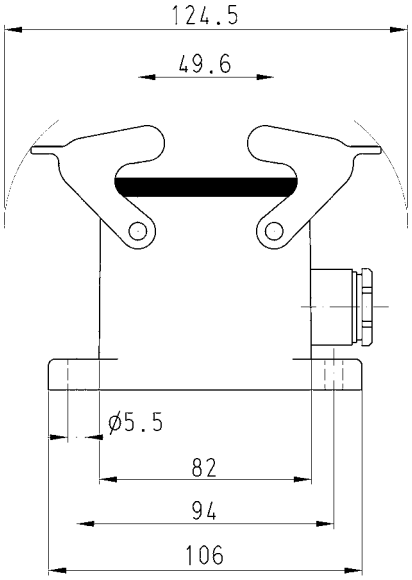

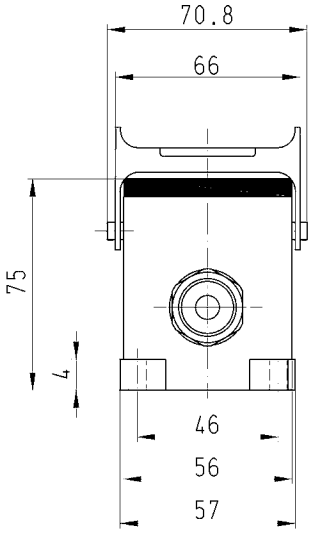

Hoods, single locking lever
Size 6Ex

Hoods
Size 6Ex

Lateral cable entry

Top cable entry

Multipole connectors for cable-to-cable couplings
with Locking levers and gasket

Lateral cable entry

Top cable entry

Description	Type	M	Part No.	P.U.
Hoods, size 6Ex	**Housing, die cast zinc alloy**			
Lateral cable entry M20				
with threaded collar	EX GOT GG 6 M20 09IA Z1	20	70.350.0636.1	1
with strain relief, IP54 ⇥Ø⇤ 9 – 13.5 mm	EX GOT GG 6 M20 09IA Z3	20	70.350.0636.3	1
Lateral cable entry M25				
with threaded collar	EX GOT GG 6 M25 09IA Z1	25	70.353.0636.1	1
with strain relief, IP54 ⇥Ø⇤ 14 – 20 mm	EX GOT GG 6 M25 09IA Z3	25	70.353.0636.3	1
Top cable entry M20				
with threaded collar	EX GOT GI 6 M20 09IA Z1	20	70.352.0636.1	1
with strain relief, IP54 ⇥Ø⇤ 9 – 13.5 mm	EX GOT GI 6 M20 09IA Z3	20	70.352.0636.3	1
Top cable entry M25				
with threaded collar	EX GOT GI 6 M25 09IA Z1	25	70.354.0636.1	1
with strain relief, IP54 ⇥Ø⇤ 14 – 20 mm	EX GOT GI 6 M25 09IA Z3	25	70.354.0636.3	1
Multipole connectors for cable-to-cable couplings with Locking levers and gasket				
Lateral cable entry M20				
with strain relief, IP54 ⇥Ø⇤ 9 – 13.5 mm	EX GOT GT 6 M20 09IA Z4	20	99.731.3329.7	10
Lateral cable entry M25				
with strain relief, IP54 ⇥Ø⇤ 14 – 20 mm	EX GOT GT 6 M25 09IA Z4	25	99.732.3329.7	1
Top cable entry M20				
with strain relief, IP54 ⇥Ø⇤ 9 – 13.5 mm	EX GOT GR 6 M20 09IA Z3	20	99.741.3329.7	10
Top cable entry M25				
with strain relief, IP54 ⇥Ø⇤ 14 – 20 mm	EX GOT GR 6 M25 09IA Z3	25	99.742.3329.7	10

Technical data	
Material	Die cast zinc alloy
Surface	powder coated, light blue
Locking levers	zinc-plated steel
Gasket	NBR
Degree of protection	
with latched locking levers	IP54
with appropriate cable glands	IP65
Temperature range	-20 … +60 °C

Contact inserts	
See the product matrix	Page 24–25

Special conditions for safe use:

1. The heavy duty connectors must be attached to a device in such a way that a minumum protection rating of IP54 is maintained in accordance with EN 60529.
2. The plug connectors can be used in an ambient temperature ranges of -20 °C to +60 °C.

See section "facts & DATA" for handling and assembly of the multipole connectors.
0344 Ex I M1 Ex ia I
BVS 03 **ATEX** 184 X
EN 60079-0:2006 EN 60079-11:2007 EN 50303:2000
For assembly instructions, see page 298 and 303.

Dimensions

Hoods

Lateral cable entry

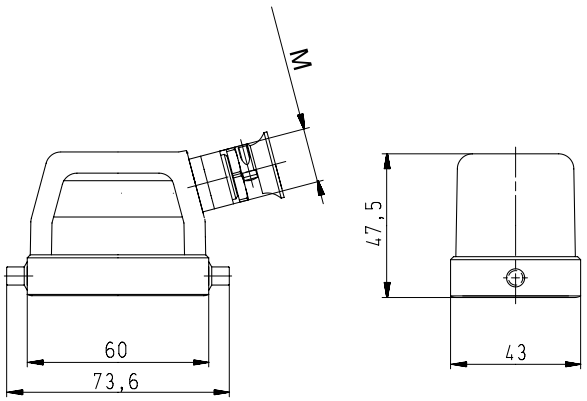

Top cable entry

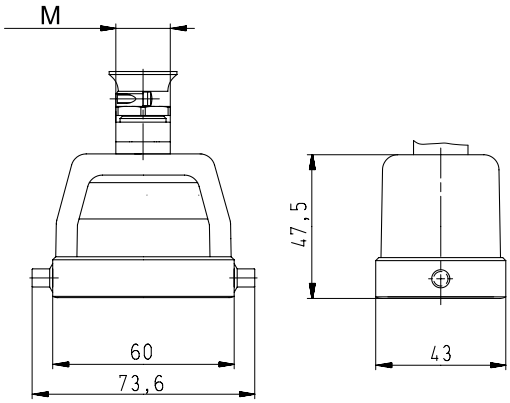

Multipole connectors for cable-to-cable couplings

with Locking levers and gasket

Lateral cable entry

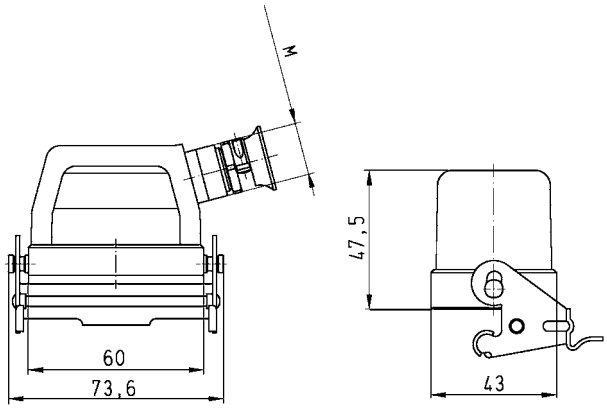

Multipole connectors for cable-to-cable couplings

with Locking levers and gasket

Top cable entry

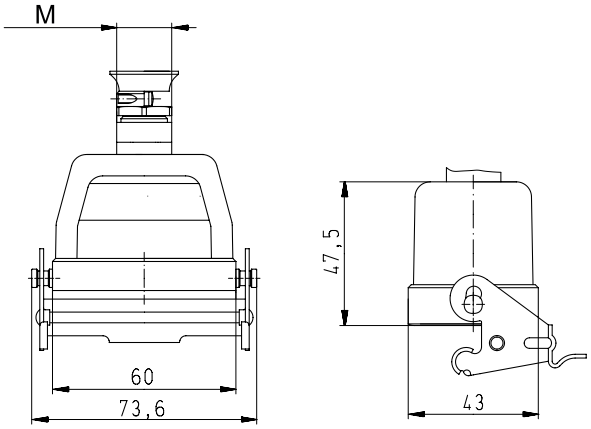

Bases, single locking lever
Size 6Ex

Bases
Size 6Ex

open
without cover
with cover

closed
1 cable gland, lateral cable entry
without cover
with cover

closed
1 cable gland, bottom
with cover

Description	Type	M	Part No.	P.U.
Bases, size 6Ex	**Housing, die cast zinc alloy**			
Open-bottom base				
without cover	EX GUT GK 6 09IA Z		70.320.0628.9	1
with cover	EX GUT GP 6 09IA Z		70.325.0628.9	1
cover with gasket	EX GUT GV 6 09IA Z		99.700.3329.7	10
Closed-bottom base				
2 cable glands, 2 x M20				
without cover				
with cable gland, IP54, →|Ø|← 3 – 14.5 mm	EX GUT GL 6 M20 09IA Z0	20	70.330.0636.0	1
with cover				
with cable gland, IP54, →|Ø|← 3 – 14.5 mm	EX GUT GR 6 M20 09IA Z0	20	70.340.0636.0	1
2 cable glands, 2 x M25				
without cover				
with cable gland, IP54, →|Ø|← 7.5 – 19 mm	EX GUT GL 6 M25 09IA Z0	25	70.334.0636.0	1
with cover				
with cable gland, IP54, →|Ø|← 7.5 – 19 mm	EX GUT GR 6 M25 09IA Z0	25	70.344.0636.0	1
1 cable gland, left, 1 x M20				
without cover				
with cable gland, IP54, →|Ø|← 3 – 14.5 mm	EX GUT GM 6 M20 09IA Z0	20	70.331.0636.0	1
with cover				
with cable gland, IP54, →|Ø|← 3 – 14.5 mm	EX GUT GS 6 M20 09IA Z0	20	70.341.0636.0	1
1 cable gland, left, 1 x M25				
without cover				
with cable gland, IP54, →|Ø|← 7.5 – 19 mm	EX GUT GM 6 M25 09IA Z0	25	70.335.0636.0	1
with cover				
with cable gland, IP54, →|Ø|← 7.5 – 19 mm	EX GUT GS 6 M25 09IA Z0	25	70.345.0636.0	1
1 cable gland, right, 1 x M20				
with cover				
with cable gland, IP54, →|Ø|← 3 – 14.5 mm	EX GUT GT 6 M20 09IA Z0	20	70.342.0636.0	1
1 cable gland, right, 1 x M25				
with cover				
with cable gland, IP54, →|Ø|← 7.5 – 19 mm	EX GUT GT 6 M25 09IA Z0	25	70.346.0636.0	1
1 cable gland, bottom, 1 x M20				
without cover				
with cable gland, IP54, →|Ø|← 3 – 14.5 mm	EX GUT GO 6 M20 09IA Z0	20	70.333.0636.0	1
with cover				
with cable gland, IP54, →|Ø|← 3 – 14.5 mm	EX GUT GU 6 M20 09IA Z0	20	70.343.0636.0	1
1 cable gland, bottom, 1 x M25				
without cover				
with cable gland, IP54, →|Ø|← 7.5 – 19 mm	EX GUT GO 6 M25 09IA Z0	25	70.337.0636.0	1
with cover				
with cable gland, IP54, →|Ø|← 7.5 – 19 mm	EX GUT GU 6 M25 09IA Z0	25	70.347.0636.0	1

Technical data	
Material metal/plastic	Die cast zinc alloy/Cover Polyamide
Surface	powder coated, light blue
Locking levers	zinc-plated steel
Gasket	NBR
Degree of protection	
with latched locking levers	IP54
with appropriate cable glands	IP65
Temperature range	-20 … +60 °C

Contact inserts	
See the product matrix	Page 24–25

Special conditions for safe use:
1. The heavy duty connectors must be attached to a device in such a way that a minumum protection rating of IP54 is maintained in accordance with EN 60529.
2. The plug connectors can be used in an ambient temperature ranges of -20 °C to +60 °C.

See section "facts & DATA" for handling and assembly of the multipole connectors.
0344 Ⓔx I M1 Ex ia I
BVS 03 **ATEX** 184 X
EN 60079-0:2006 EN 60079-11:2007 EN 50303:2000
For assembly instructions, see page 298 and 303.

Dimensions

Bases

open

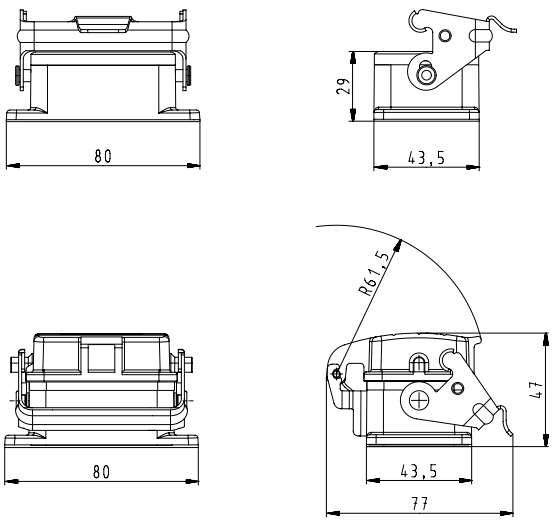

closed, 2 cable glands, lateral cable entry

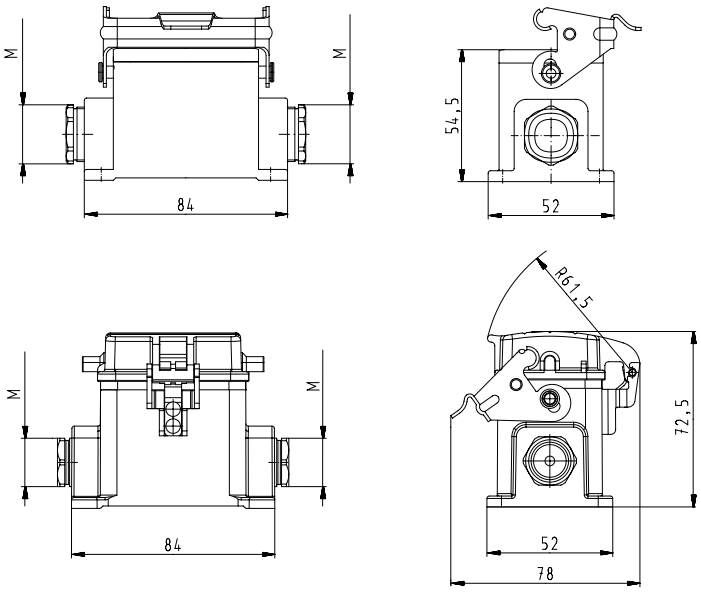

closed, 1 cable gland, lateral cable entry

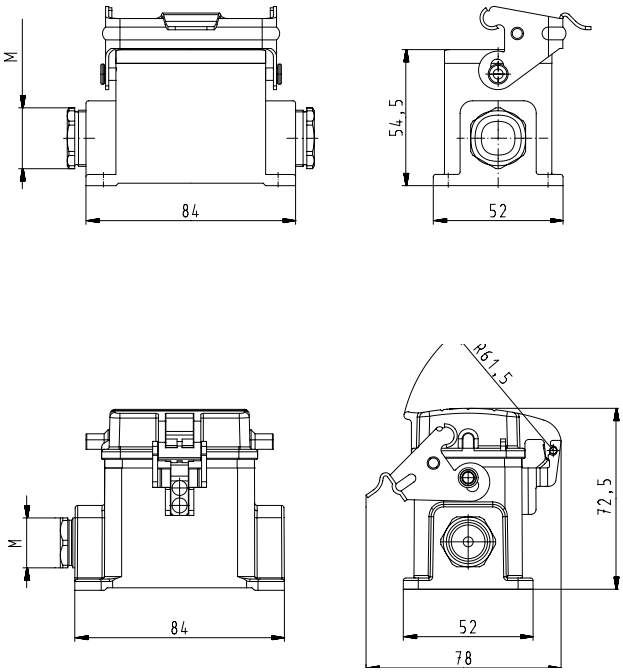

closed, 1 cable gland, bottom

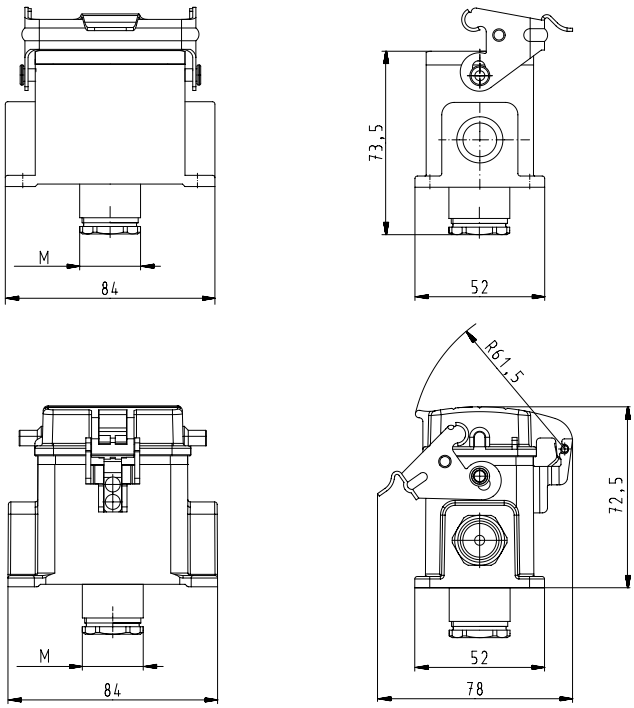

Hoods, double locking lever
Size 10Ex

Hoods
Size 10Ex

Lateral cable entry

Top cable entry

Multipole connectors for cable-to-cable couplings
with Locking levers and gasket

Lateral cable entry

Top cable entry

Description	Type	M	Part No.	P.U.
Hoods, size 10Ex	**Housing, die cast zinc alloy**			
Lateral cable entry M20				
with threaded collar	EX GOT GA 10 M20 09IA Z1	20	70.350.1036.1	1
with strain relief, IP54 ⇥Ø⇤ 9 – 13.5 mm	EX GOT GA 10 M20 09IA Z3	20	70.350.1036.3	1
Lateral cable entry M25				
with threaded collar	EX GOT GA 10 M25 09IA Z1	25	70.353.1036.1	1
with strain relief, IP54 ⇥Ø⇤ 14 – 20 mm	EX GOT GA 10 M25 09IA Z3	25	70.353.1036.3	1
Top cable entry M20				
with threaded collar	EX GOT GC 10 M20 09IA Z1	20	70.352.1036.1	1
with strain relief, IP54 ⇥Ø⇤ 9 – 13.5 mm	EX GOT GC 10 M20 09IA Z3	20	70.352.1036.3	1
Top cable entry M25				
with threaded collar	EX GOT GC 10 M25 09IA Z1	25	70.354.1036.1	1
with strain relief, IP54 ⇥Ø⇤ 14 – 20 mm	EX GOT GC 10 M25 09IA Z3	25	70.354.1036.3	1
90 V Hoods, size 10Ex				
with Locking levers without gasket				
Lateral cable entry M20				
with threaded collar, with Locking levers	EX GOT GD 10 M20 09IA Z1	20	70.355.1036.1	1
with strain relief, IP54 ⇥Ø⇤ 9 – 13.5 mm, with Locking levers	EX GOT GD 10 M20 09IA Z3	20	70.355.1036.3	1
Lateral cable entry M25				
with threaded collar, with Locking levers	EX GOT GD 10 M25 09IA Z1	25	70.358.1036.1	1
with strain relief, IP54 ⇥Ø⇤ 14 – 20 mm, with Locking levers	EX GOT GD 10 M25 09IA Z3	25	70.358.1036.3	1
Top cable entry M20				
with threaded collar, with Locking levers	EX GOT GF 10 M20 09IA Z1	20	70.357.1036.1	1
with strain relief, IP54 ⇥Ø⇤ 9 – 13.5 mm, with Locking levers	EX GOT GC 10 M20 09IA Z3	20	70.357.1036.3	1
Top cable entry M25				
with threaded collar, with Locking levers	EX GOT GF 10 M25 09IA Z1	25	70.359.1036.1	1
with strain relief, IP54 ⇥Ø⇤ 14 – 20 mm, with Locking levers	EX GOT GF 10 M25 09IA Z3	25	70.359.1036.3	1
Multipole connectors for cable-to-cable couplings with Locking levers and gasket				
Lateral cable entry M20				
with strain relief, IP54 ⇥Ø⇤ 9 – 13.5 mm	EX GOT GS 10 M20 09IA Z4	20	99.733.3329.7	8
Lateral cable entry M25				
with strain relief, IP54 ⇥Ø⇤ 14 – 20 mm	EX GOT GS 10 M25 09IA Z4	25	99.734.3329.7	1
Top cable entry M20				
with strain relief, IP54 ⇥Ø⇤ 9 – 13.5 mm	EX GOT GP 10 M20 09IA Z4	20	99.743.3329.7	8
Top cable entry M25				
with strain relief, IP54 ⇥Ø⇤ 14 – 20 mm	EX GOT GP 10 M25 09IA Z4	25	99.744.3329.7	8

Technical data	
Material	Die cast zinc alloy
Surface	powder coated, light blue
Locking levers	zinc-plated steel
Gasket	NBR
Degree of protection	
with latched locking levers	IP54
with appropriate cable glands	IP65
Temperature range	-20 … +60 °C

Contact inserts	
See the product matrix	Page 24–25

Special conditions for safe use:

1. The heavy duty connectors must be attached to a device in such a way that a minumum protection rating of IP54 is maintained in accordance with EN 60529.
2. The plug connectors can be used in an ambient temperature ranges of -20 °C to +60 °C.

See section "facts & DATA" for handling and assembly of the multipole connectors.
0344 Ex I M1 Ex ia I
BVS 03 ATEX 184 X
EN 60079-0:2006 EN 60079-11:2007 EN 50303:2000
For assembly instructions, see page 282 and 287.

Dimensions

Hoods

Lateral cable entry

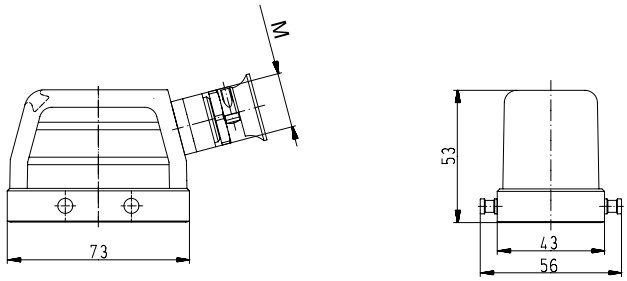

Top cable entry

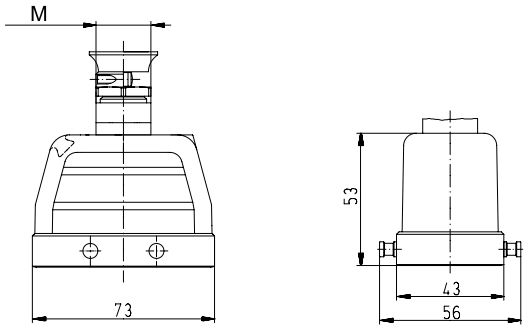

Multipole connectors for cable-to-cable couplings

with Locking levers and gasket

Lateral cable entry

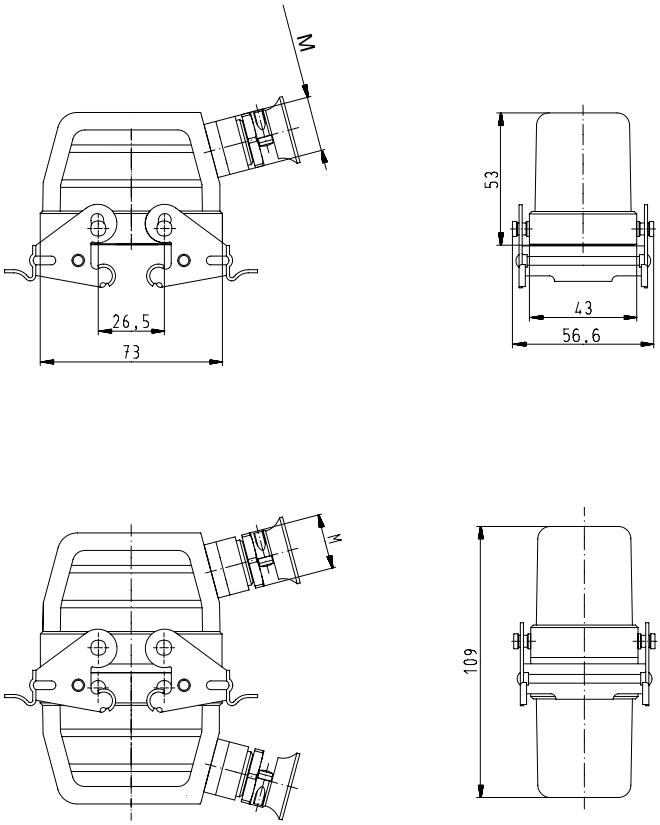

Multipole connectors for cable-to-cable couplings

with Locking levers and gasket

Top cable entry

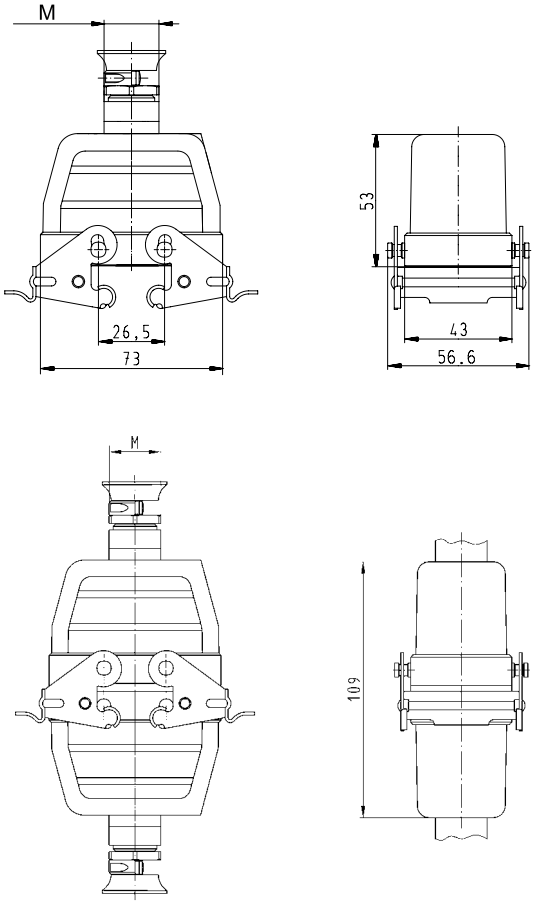

Bases, double locking lever
Size 10Ex

Bases
Size 10Ex

open
without cover
with cover

closed
1 cable gland, lateral cable entry
without cover

closed
1 cable gland, bottom
without cover

Description	Type	M	Part No.	P.U.
Bases, size 10Ex	**Housing, die cast zinc alloy**			
Open-bottom base				
without cover	EX GUT GA 10 09IA Z		70.320.1028.9	1
with cover, without Locking levers	EX GUT GE 10 09IA Z		70.325.1028.9	1
cover with gasket	EX GUT GX 10 09IA Z		99.706.3329.7	10
Closed-bottom base				
2 cable glands, 2 x M20				
without cover				
with cable gland, IP54, →|Ø|← 3 – 14.5 mm	EX GUT GB 10 M20 09IA Z0	20	70.330.1036.0	1
with cover, without Locking levers				
with cable gland, IP54, →|Ø|← 3 – 14.5 mm	EX GUT GF 10 M20 09IA Z0	20	70.340.1036.0	1
2 cable glands, 2 x M25				
without cover				
with cable gland, IP54, →|Ø|← 7.5 – 19 mm	EX GUT GB 10 M25 09IA Z0	25	70.334.1036.0	1
with cover				
with cable gland, IP54, →|Ø|← 7.5 – 19 mm	EX GUT GF 10 M25 09IA Z0	25	70.344.1036.0	1
1 cable gland, left, 1 x M20				
without cover				
with cable gland, IP54, →|Ø|← 3 – 14.5 mm	EX GUT GC 10 M20 09IA Z0	20	70.331.1036.0	1
with cover, without Locking levers				
with cable gland, IP54, →|Ø|← 3 – 14.5 mm	EX GUT GG 10 M20 09IA Z0	20	70.341.1036.0	1
1 cable gland, left, 1 x M25				
without cover				
with cable gland, IP54, →|Ø|← 7.5 – 19 mm	EX GUT GC 10 M25 09IA Z0	25	70.335.1036.0	1
with cover, without Locking levers				
with cable gland, IP54, →|Ø|← 7.5 – 19 mm	EX GUT GG 10 M25 09IA Z0	25	70.345.1036.0	1
1 cable gland, bottom, 1 x M20				
without cover				
with cable gland, IP54, →|Ø|← 3 – 14.5 mm	EX GUT GD 10 M20 09IA Z0	20	70.333.1036.0	1
with cover, without Locking levers				
with cable gland, IP54, →|Ø|← 3 – 14.5 mm	EX GUT GI 10 M20 09IA Z0	20	70.343.1036.0	1
1 cable gland, bottom, 1 x M25				
without cover				
with cable gland, IP54, →|Ø|← 7.5 – 19 mm	EX GUT GD 10 M25 09IA Z0	25	70.337.1036.0	1
with cover, without Locking levers				
with cable gland, IP54, →|Ø|← 7.5 – 19 mm	EX GUT GI 10 M25 09IA Z0	25	70.347.1036.0	1

Technical data	
Material metal/plastic	Die cast zinc alloy/Cover Polyamide
Surface	powder coated, light blue
Locking levers	zinc-plated steel
Gasket	NBR
Degree of protection	
with latched locking levers	IP54
with appropriate cable glands	IP65
Temperature range	-20 … +60 °C

Contact inserts	
See the product matrix	Page 24–25

Special conditions for safe use:
1. The heavy duty connectors must be attached to a device in such a way that a minumum protection rating of IP54 is maintained in accordance with EN 60529.
2. The plug connectors can be used in an ambient temperature ranges of -20 °C to +60 °C.

See section "facts & DATA" for handling and assembly of the multipole connectors.
0344 Ex I M1 Ex ia I
BVS 03 **ATEX** 184 X
EN 60079-0:2006 EN 60079-11:2007 EN 50303:2000
For assembly instructions, see page 282 and 287.

Dimensions

Bases

open

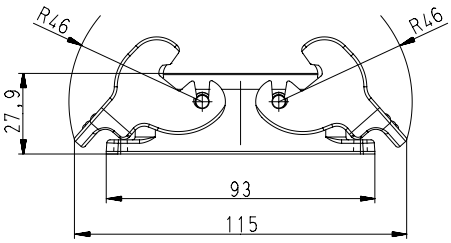

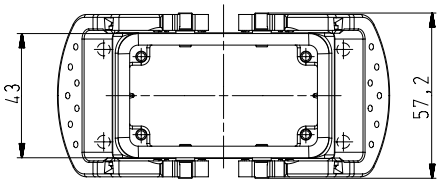

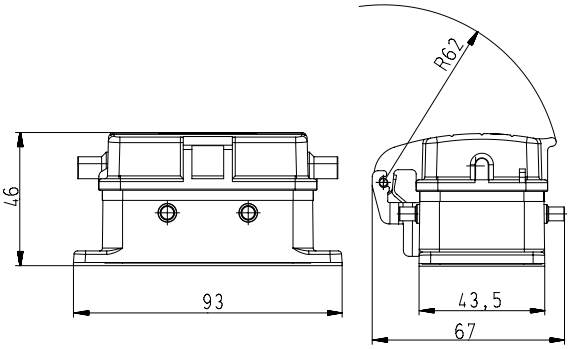

closed, 2 cable glands

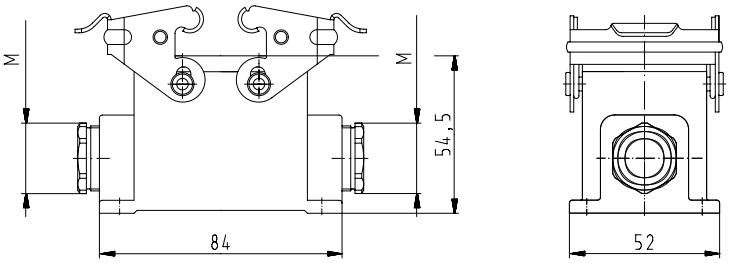

closed, 1 cable gland, lateral cable entry

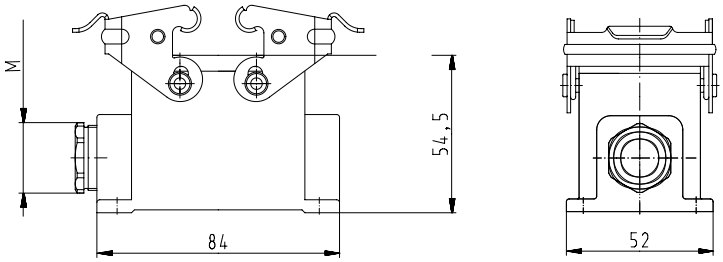

closed, 1 cable gland, bottom

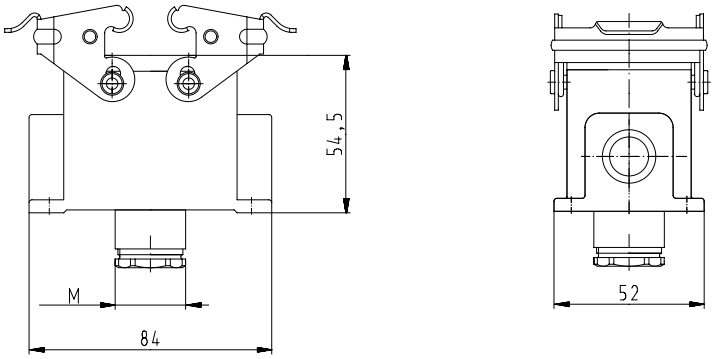

Hoods, double locking lever
Size 16Ex

Hoods
Size 16Ex

Lateral cable entry

Top cable entry

Multipole connectors for cable-to-cable couplings
with Locking levers and gasket

Lateral cable entry

Top cable entry

Description	Type	M	Part No.	P.U.
Hoods, size 16Ex	**Housing, die cast zinc alloy**			
Lateral cable entry M25				
with threaded collar	EX GOT GA 16 M25 09IA Z1	25	70.350.1636.1	1
with strain relief, IP54 ⇥Ø⇤ 14 – 20 mm	EX GOT GA 16 M25 09IA Z3	25	70.350.1636.3	1
Lateral cable entry M32				
with threaded collar	EX GOT GA 16 M32 09IA Z1	32	70.353.1636.1	1
with strain relief, IP54 ⇥Ø⇤ 21 – 28.5 mm	EX GOT GA 16 M32 09IA Z3	32	70.353.1636.3	1
Top cable entry M25				
with threaded collar	EX GOT GC 16 M25 09IA Z1	25	70.352.1636.1	1
with strain relief, IP54 ⇥Ø⇤ 14 – 20 mm	EX GOT GC 16 M25 09IA Z3	25	70.352.1636.3	1
Top cable entry M32				
with threaded collar	EX GOT GC 16 M25 09IA Z1	32	70.354.1636.1	1
with strain relief, IP54 ⇥Ø⇤ 21 – 28.5 mm	EX GOT GC 16 M25 09IA Z3	32	70.354.1636.3	1
90 V Hoods, size 16Ex				
with Locking levers without gasket				
Lateral cable entry M25				
with threaded collar, with Locking levers	EX GOT GD 16 M25 09IA Z1	25	70.355.1636.1	1
with strain relief, IP54 ⇥Ø⇤ 14 – 20 mm, with Locking levers	EX GOT GD 16 M25 09IA Z3	25	70.355.1636.3	1
Lateral cable entry M32				
with threaded collar, with Locking levers	EX GOT GD 16 M32 09IA Z1	32	70.358.1636.1	1
with strain relief, IP54 ⇥Ø⇤ 21 – 28.5 mm, with Locking levers	EX GOT GD 16 M32 09IA Z3	32	70.358.1636.3	1
Top cable entry M25				
with threaded collar, with Locking levers	EX GOT GF 16 M25 09IA Z1	25	70.357.1636.1	1
with strain relief, IP54 ⇥Ø⇤ 14 – 20 mm, with Locking levers	EX GOT GC 16 M25 09IA Z3	25	70.357.1636.3	1
Top cable entry M32				
with threaded collar, with Locking levers	EX GOT GF 16 M25 09IA Z1	32	70.359.1636.1	1
with strain relief, IP54 ⇥Ø⇤ 21 – 28.5 mm, with Locking levers	EX GOT GF 16 M25 09IA Z3	32	70.359.1636.3	1
Multipole connectors for cable-to-cable couplings with Locking levers and gasket				
Lateral cable entry M25				
with strain relief, IP54 ⇥Ø⇤ 14 – 20 mm	EX GOT GS 16 M25 09IA Z4	25	99.735.3329.7	1
Lateral cable entry M32				
with strain relief, IP54 ⇥Ø⇤ 21 – 28.5 mm	EX GOT GS 16 M32 09IA Z4	32	99.736.3329.7	1
Top cable entry M25				
with strain relief, IP54 ⇥Ø⇤ 14 – 20 mm	EX GOT GR 16 M25 09IA Z4	25	99.745.3329.7	1
Top cable entry M32				
with strain relief, IP54 ⇥Ø⇤ 21 – 28.5 mm	EX GOT GR 16 M32 09IA Z4	32	99.746.3329.7	1

Technical data	
Material	Die cast zinc alloy
Surface	powder coated, light blue
Locking levers	zinc-plated steel
Gasket	NBR
Degree of protection	
with latched locking levers	IP54
with appropriate cable glands	IP65
Temperature range	-20 … +60 °C

Contact inserts	
See the product matrix	Page 24–25

Special conditions for safe use:

1. The heavy duty connectors must be attached to a device in such a way that a minumum protection rating of IP54 is maintained in accordance with EN 60529.
2. The plug connectors can be used in an ambient temperature ranges of -20 °C to +60 °C.

See section "facts & DATA" for handling and assembly of the multipole connectors.
0344 Ex I M1 Ex ia I
BVS 03 **ATEX** 184 X
EN 60079-0:2006 EN 60079-11:2007 EN 50303:2000
For assembly instructions, see page 282 and 287.

Dimensions

Hoods

Lateral cable entry

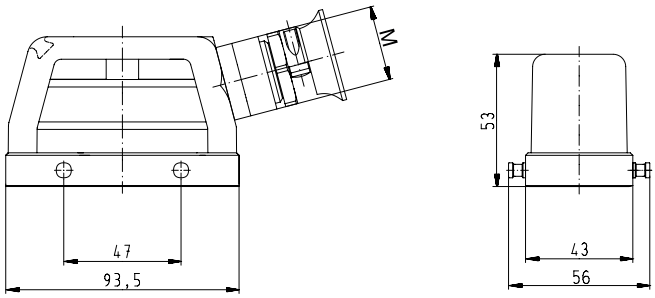

Top cable entry

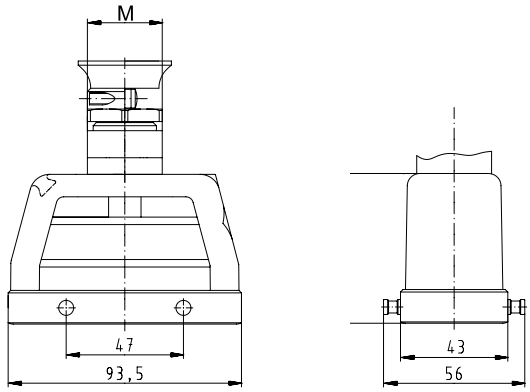

Multipole connectors for cable-to-cable couplings

with Locking levers and gasket

Lateral cable entry

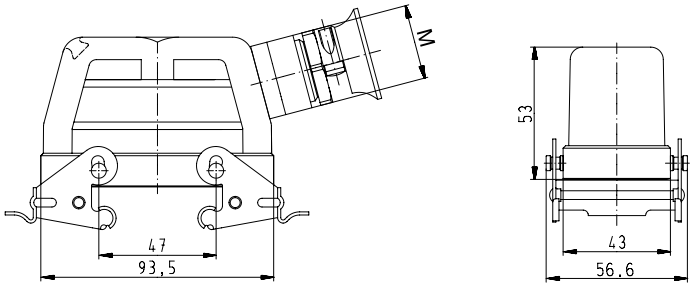

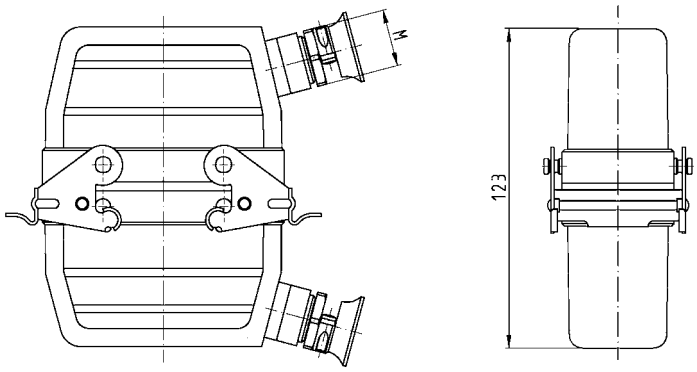

Multipole connectors for cable-to-cable couplings

with Locking levers and gasket

Top cable entry

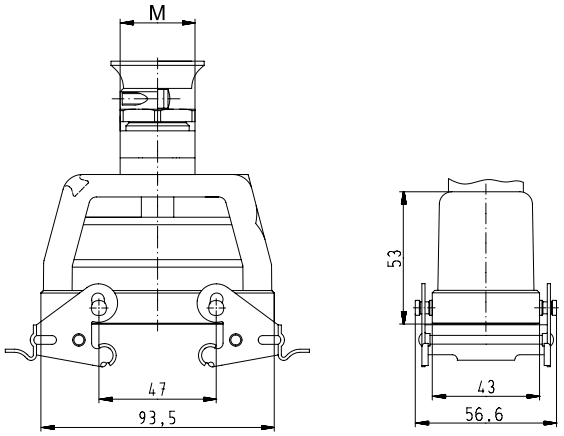

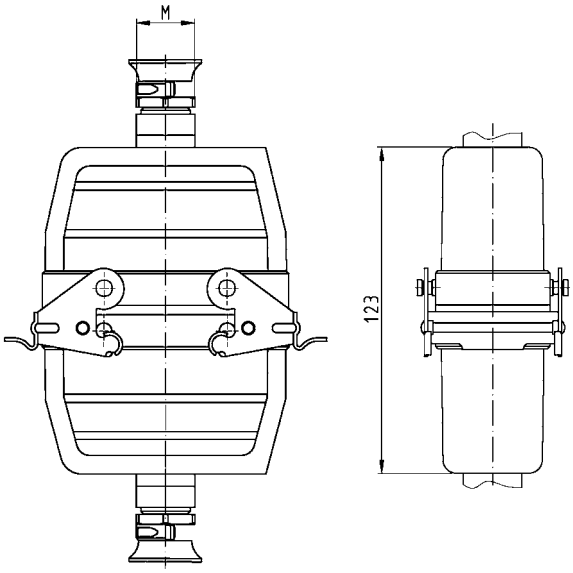

Bases, double locking lever
Size 16Ex

Bases
Size 16Ex

open
without cover

Description	Type	M	Part No.	P.U.
Bases, size 16Ex	**Housing, die cast zinc alloy**			
Open-bottom base				
without cover	EX GUT GA16 09IA Z		70.320.1628.9	1
with cover, without Locking levers	EX GUT GE 16 09IA Z		70.325.1628.9	1
cover with gasket, without Locking levers	EX GUT GX16 09IA Z		99.702.3329.7	10

Technical data	
Material metal/plastic	Die cast zinc alloy/Cover Polyamide
Surface	powder coated, light blue
Locking levers	zinc-plated steel
Gasket	NBR
Degree of protection	
with latched locking levers	IP54
with appropriate cable glands	IP65
Temperature range	-20 … +60 °C

Contact inserts	
See the product matrix	Page 24–25

Special conditions for safe use:

1. The heavy duty connectors must be attached to a device in such a way that a minumum protection rating of IP54 is maintained in accordance with EN 60529.
2. The plug connectors can be used in an ambient temperature ranges of -20 °C to +60 °C.

See section "facts & DATA" for handling and assembly of the multipole connectors.
0344 Ex I M1 Ex ia I
BVS 03 **ATEX** 184 X
EN 60079-0:2006 EN 60079-11:2007 EN 50303:2000
For assembly instructions, see page 282 and 287.

Dimensions

Bases

open

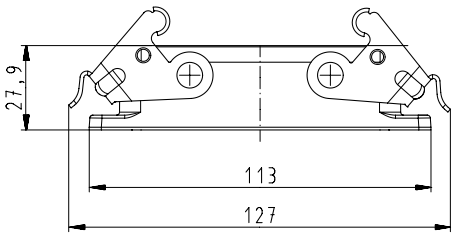

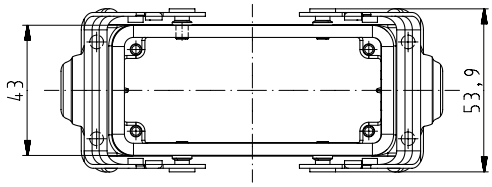

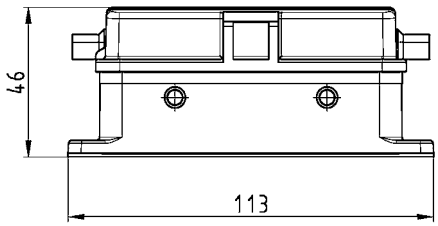

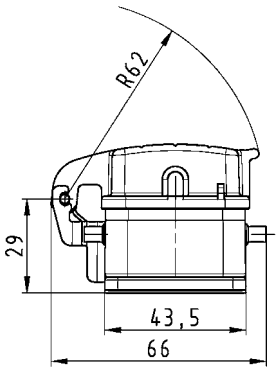

Hoods, double locking lever
Size 24Ex

Hoods
Size 24Ex

Lateral cable entry

Top cable entry

Multipole connectors for cable-to-cable couplings
with Locking levers and gasket

Lateral cable entry

Top cable entry

Description	Type	M	Part No.	P.U.
Hoods, size 24Ex	**Housing, die cast zinc alloy**			
Lateral cable entry M25				
with threaded collar	EX GOT GA 24 M25 09IA Z1	25	70.350.2436.1	1
with strain relief, IP54 ⇥Ø⇤ 14 – 20 mm	EX GOT GA 24 M25 09IA Z3	25	70.350.2436.3	1
Lateral cable entry M32				
with threaded collar	EX GOT GA 24 M32 09IA Z1	32	70.353.2436.1	1
with strain relief, IP54 ⇥Ø⇤ 21 – 28.5 mm	EX GOT GA 24 M32 09IA Z3	32	70.353.2436.3	1
Top cable entry M25				
with threaded collar	EX GOT GC 24 M25 09IA Z1	25	70.352.2436.1	1
with strain relief, IP54 ⇥Ø⇤ 14 – 20 mm	EX GOT GC 24 M25 09IA Z3	25	70.352.2436.3	1
Top cable entry M32				
with threaded collar	EX GOT GC 24 M32 09IA Z1	32	70.354.2436.1	1
with strain relief, IP54 ⇥Ø⇤ 21 – 28.5 mm	EX GOT GC 24 M32 09IA Z3	32	70.354.2436.3	1
90 V Hoods, size 24Ex				
with Locking levers without gasket				
Lateral cable entry M25				
with threaded collar, with Locking levers	EX GOT GD 24 M25 09IA Z1	25	70.355.2436.1	1
with strain relief, IP54 ⇥Ø⇤ 14 – 20 mm, with Locking levers	EX GOT GD 24 M25 09IA Z3	25	70.355.2436.3	1
Lateral cable entry M32				
with threaded collar, with Locking levers	EX GOT GD 24 M32 09IA Z1	32	70.358.2436.1	1
with strain relief, IP54 ⇥Ø⇤ 21 – 28.5 mm, with Locking levers	EX GOT GD 24 M32 09IA Z3	32	70.358.2436.3	1
Top cable entry M25				
with threaded collar, with Locking levers	EX GOT GF 24 M25 09IA Z1	25	70.357.2436.1	1
with strain relief, IP54 ⇥Ø⇤ 14 – 20 mm, with Locking levers	EX GOT GC 24 M25 09IA Z3	25	70.357.2436.3	1
Top cable entry M32				
with threaded collar, with Locking levers	EX GOT GF 24 M32 09IA Z1	32	70.359.2436.1	1
with strain relief, IP54 ⇥Ø⇤ 21 – 28.5 mm, with Locking levers	EX GOT GF 24 M32 09IA Z3	32	70.359.2436.3	1
Multipole connectors for cable-to-cable couplings with Locking levers and gasket				
Lateral cable entry M25				
with strain relief, IP54 ⇥Ø⇤ 14 – 20 mm	EX GOT GS 24 M25 09IA Z4	25	99.737.3329.7	5
Lateral cable entry M32				
with strain relief, IP54 ⇥Ø⇤ 21 – 28.5 mm	EX GOT GS 24 M32 09IA Z4	32	99.738.3329.7	5
Top cable entry M25				
with strain relief, IP54 ⇥Ø⇤ 14 – 20 mm	EX GOT GR 24 M25 09IA Z4	25	99.747.3329.7	4
Top cable entry M32				
with strain relief, IP54 ⇥Ø⇤ 21 – 28.5 mm	EX GOT GR 24 M32 09IA Z4	32	99.748.3329.7	4

Technical data	
Material	Die cast zinc alloy
Surface	powder coated, light blue
Locking levers	zinc-plated steel
Gasket	–
Degree of protection	
with latched locking levers	IP54
with appropriate cable glands	IP65
Temperature range	-20 … +60 °C

Contact inserts	
See the product matrix	Page 24–25

Special conditions for safe use:

1. The heavy duty connectors must be attached to a device in such a way that a minumum protection rating of IP54 is maintained in accordance with EN 60529.
2. The plug connectors can be used in an ambient temperature ranges of -20 °C to +60 °C.

See section "facts & DATA" for handling and assembly of the multipole connectors.
0344 Ex I M1 Ex ia I
BVS 03 **ATEX** 184 X
EN 60079-0:2006 EN 60079-11:2007 EN 50303:2000
For assembly instructions, see page 282 and 287.

Dimensions

Hoods

Lateral cable entry

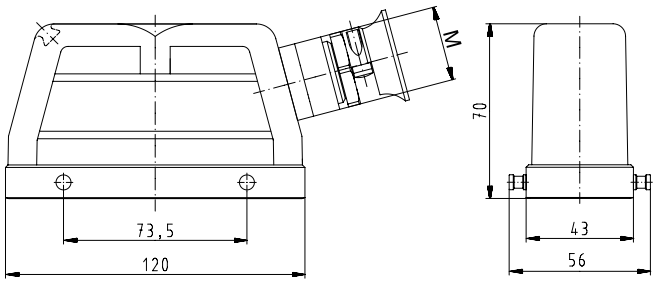

Top cable entry

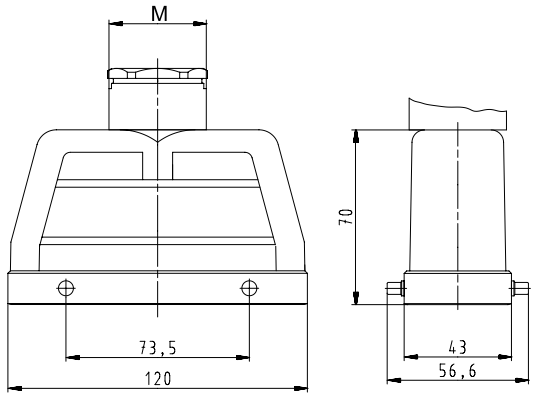

Multipole connectors for cable-to-cable couplings

with Locking levers and gasket

Lateral cable entry

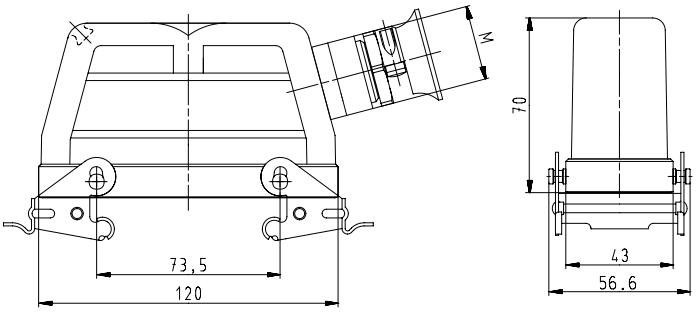

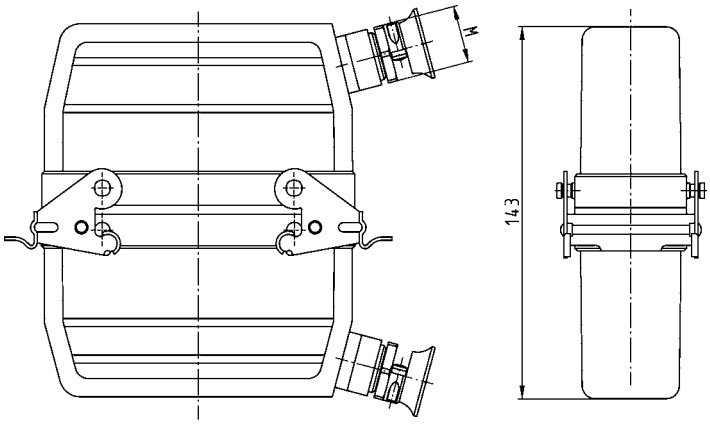

Multipole connectors for cable-to-cable couplings

with Locking levers and gasket

Top cable entry

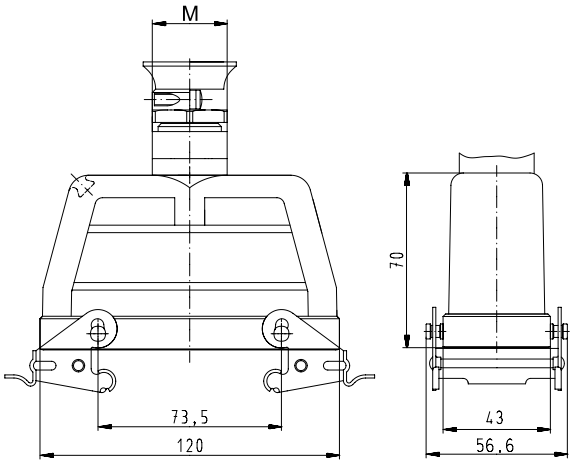

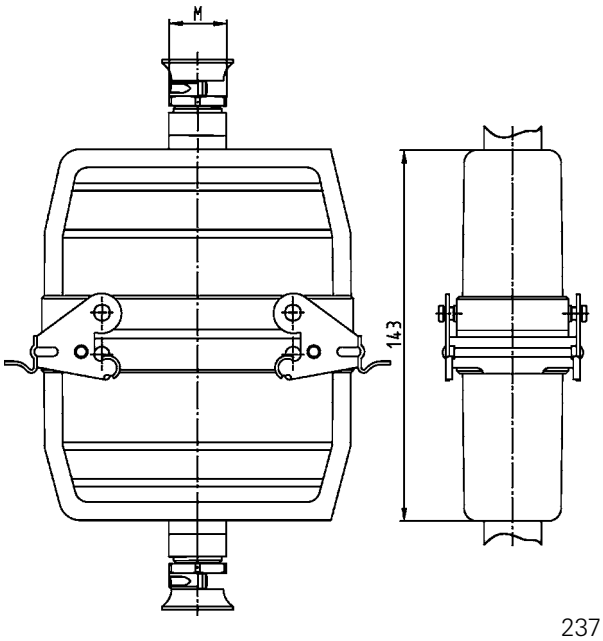

Bases, double locking lever
Size 24Ex

Bases
Size 24Ex

open
without cover

closed
1 cable gland
without cover

closed
1 cable gland, bottom
without cover

Description	Type	M	Part No.	P.U.
Bases, size 24Ex	**Housing, die cast zinc alloy**			
Open-bottom base				
without cover	EX GUT GA 24 09IA Z		70.320.2428.9	1
with cover, without Locking levers	EX GUT GE 24 09IA Z		70.325.2428.9	1
cover with gasket, without Locking levers	EX GUT GX 24 09IA Z		99.704.3329.7	10
Closed-bottom base				
2 cable glands, 2 x M25				
without cover				
with cable gland, IP54, ⇥IØI⇤ 7.5 – 19 mm	EX GUT GB 24 M25 09IA Z0	25	70.330.2436.0	1
with cover, without Locking levers				
with cable gland, IP54, ⇥IØI⇤ 7.5 – 19 mm	EX GUT GF 24 M25 09IA Z0	25	70.340.2436.0	1
1 cable gland, left, 1 x M25				
without cover				
with cable gland, IP54, ⇥IØI⇤ 7.5 – 19 mm	EX GUT GC 24 M25 09IA Z0	25	70.331.2436.0	1
with cover, without Locking levers				
with cable gland, IP54, ⇥IØI⇤ 7.5 – 19 mm	EX GUT GG 24 M25 09IA Z0	25	70.341.2436.0	1
1 cable gland, bottom, 1 x M25				
without cover				
with cable gland, IP54, ⇥IØI⇤ 7.5 – 19 mm	EX GUT GD 24 M25 09IA Z0	25	70.333.2436.0	1
with cover, without Locking levers				
with cable gland, IP54, ⇥IØI⇤ 7.5 – 19 mm	EX GUT GI 24 M25 09IA Z0	25	70.343.2436.0	1

Technical data	
Material	Die cast zinc alloy
Surface	powder coated, light blue
Locking levers	zinc-plated steel
Gasket	NBR
Degree of protection	
with latched locking levers	IP54
with appropriate cable glands	IP65
Temperature range	-20 … +60 °C

Contact inserts	
See the product matrix	Page 24–25

Special conditions for safe use:

1. The heavy duty connectors must be attached to a device in such a way that a minumum protection rating of IP54 is maintained in accordance with EN 60529.
2. The plug connectors can be used in an ambient temperature ranges of -20 °C to +60 °C.

See section "facts & DATA" for handling and assembly of the multipole connectors.
0344 Ⓔx I M1 Ex ia I
BVS 03 **ATEX** 184 X
EN 60079-0:2006 EN 60079-11:2007 EN 50303:2000
For assembly instructions, see page 282 and 287.

Dimensions

Bases

open

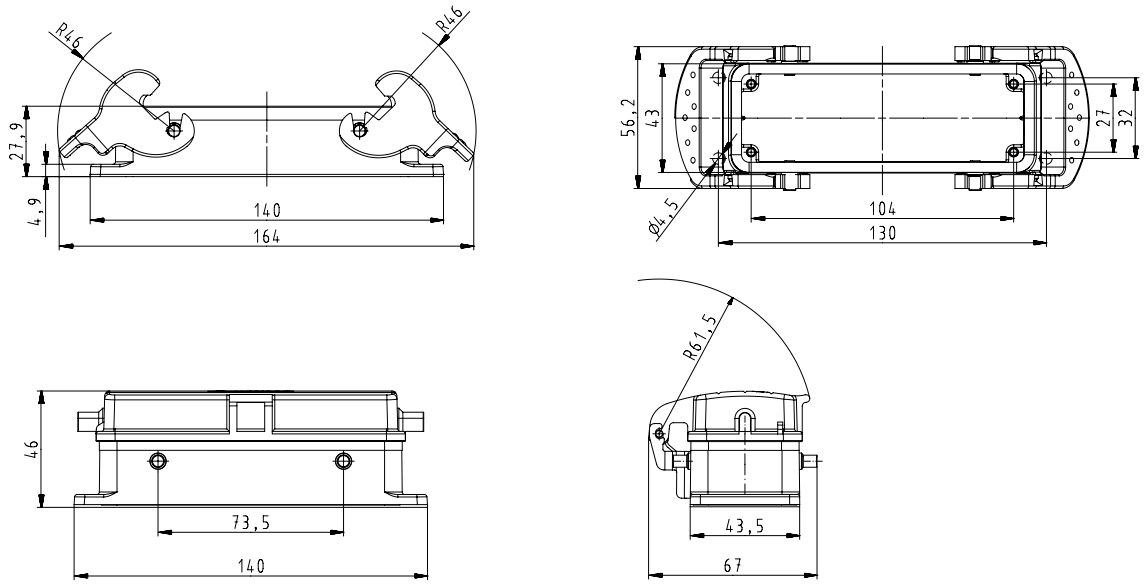

closed, 2 cable glands

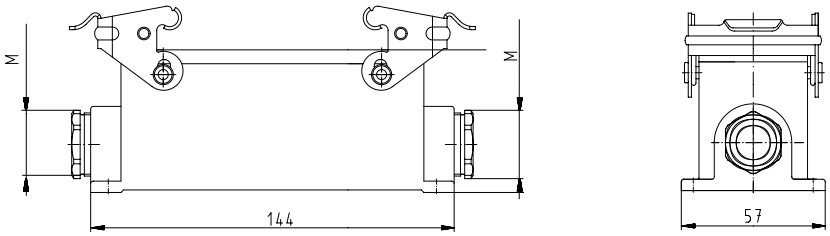

closed, 1 cable gland

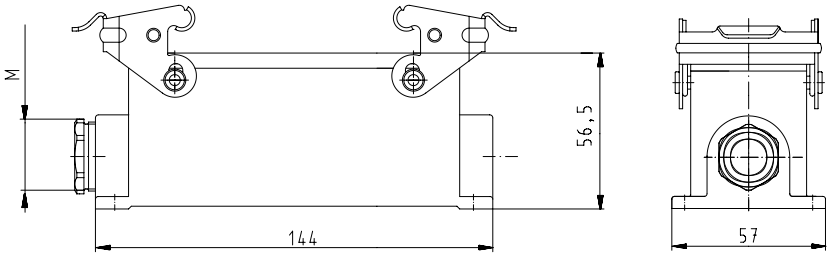

closed, 1 cable gland, bottom

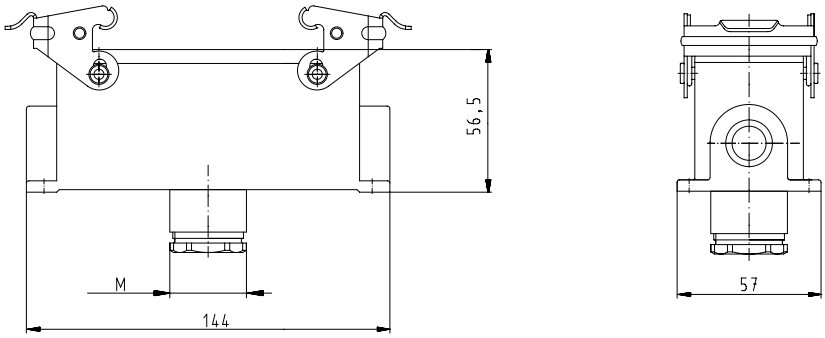

Hoods, single locking lever, Size 48Ex

Hoods
Size 48Ex

Lateral cable entry

Top cable entry

Description	Type	M	Part No.	P.U.
Hoods, size 48Ex	**Housing, die cast zinc alloy**			
Lateral cable entry M32				
with threaded collar	EX GOT GG 48 M32 09IA Z1	32	70.350.4836.1	1
with strain relief, IP54 ⇥Ø⇤ 21 – 28.5 mm	EX GOT GG 48 M32 09IA Z3	32	70.350.4836.3	1
Lateral cable entry M40				
with threaded collar	EX GOT GG 48 M40 09IA Z1	40	70.353.4836.1	1
Top cable entry M32				
with threaded collar	EX GOT GI 48 M32 09IA Z1	32	70.352.4836.1	1
with strain relief, IP54 ⇥Ø⇤ 21 – 28.5 mm	EX GOT GI 48 M32 09IA Z3	32	70.352.4836.3	1
Top cable entry M40				
with threaded collar	EX GOT GI 48 M40 09IA Z1	40	70.354.4836.1	1

Technical data	
Material	Die cast zinc alloy
Surface	powder coated, light blue
Locking levers	–
Gasket	–
Degree of protection	
with latched locking levers	IP54
with appropriate cable glands	IP65
Temperature range	-20 … +60 °C

Contact inserts	
See the product matrix	Page 24–25

Special conditions for safe use:

1. The heavy duty connectors must be attached to a device in such a way that a minumum protection rating of IP54 is maintained in accordance with EN 60529.
2. The plug connectors can be used in an ambient temperature ranges of -20 °C to +60 °C.

See section “facts & DATA” for handling and assembly of the multipole connectors.

0344 Ex I M1 Ex ia I

BVS 03 **ATEX** 184 X

EN 60079-0:2006 EN 60079-11:2007 EN 50303:2000

For assembly instructions, see page 282 and 287.

Dimensions

Hoods

Lateral cable entry

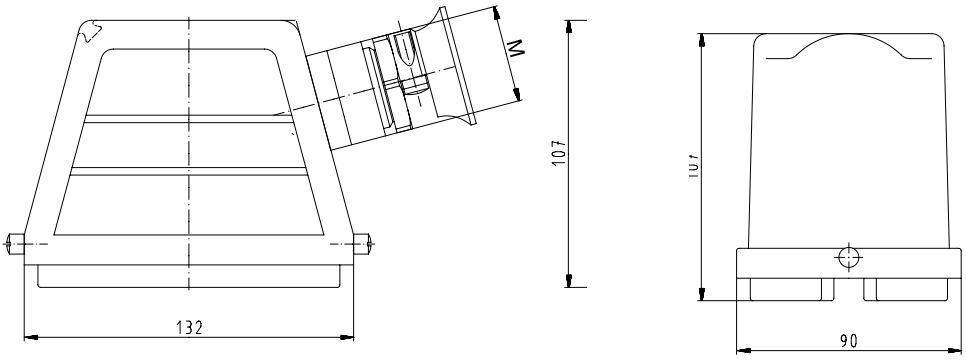

Top cable entry

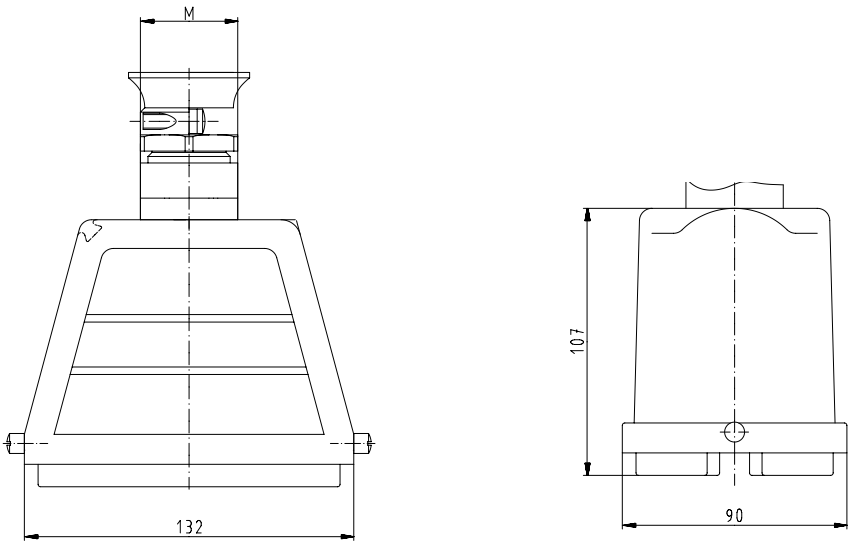

Bases, single locking lever, Size 48Ex

Bases Size 48Ex

open

without cover
with cover

closed

without cover
with cover

Description	Type	M	Part No.	P.U.
Bases, size 48Ex	**Housing, die cast zinc alloy**			
Open-bottom base				
without cover	EX GUT GK48 09IA Z		70.320.4828.9	1
with metal cover	EX GUT GP48 09IA Z		70.325.4828.9	1
Closed-bottom base				
1 cable gland, left, 1 x M32				
without cover				
with strain relief, IP54 ⇸IØI⇷ 21 – 28.5 mm	BAS GUT GM 48 M32 09IA Z3	32	70.331.4836.3	1
with metal cover				
with strain relief, IP54 ⇸IØI⇷ 21 – 28.5 mm	BAS GUT GS 48 M32 09IA Z3	32	70.341.4836.3	1
1 cable gland, left, 1 x M40				
with metal cover				
with cable gland, IP54, ⇸IØI⇷ 27 – 37 mm	BAS GUT GR 48 M40 09IA Z3	40	70.344.4836.4	1

Technical data	
Material	Die cast zinc alloy
Surface	powder coated, light blue
Locking levers	–
Gasket	–
Degree of protection	
with latched locking levers	IP54
with appropriate cable glands	IP65
Temperature range	-20 … +60 °C

Contact inserts	
See the product matrix	Page 24–25

Special conditions for safe use:

1. The heavy duty connectors must be attached to a device in such a way that a minumum protection rating of IP54 is maintained in accordance with EN 60529.
2. The plug connectors can be used in an ambient temperature ranges of -20 °C to +60 °C.

See section "facts & DATA" for handling and assembly of the multipole connectors.
0344 Ex I M1 Ex ia I
BVS 03 **ATEX** 184 X
EN 60079-0:2006 EN 60079-11:2007 EN 50303:2000
For assembly instructions, see page 282 and 287.

Dimensions

Bases

open

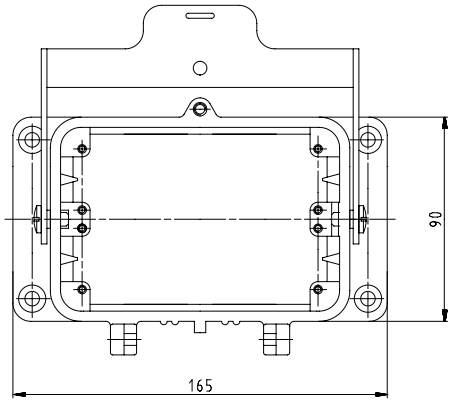

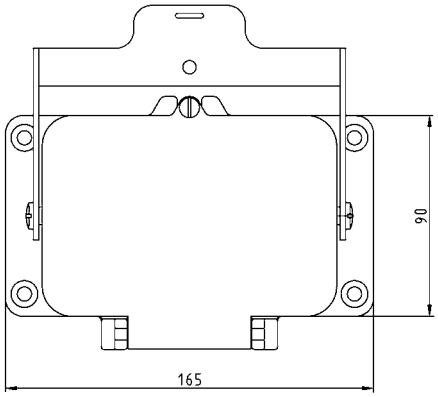

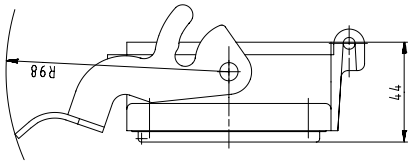

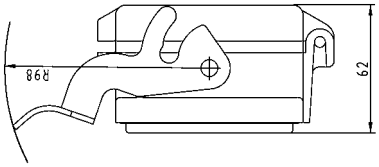

closed

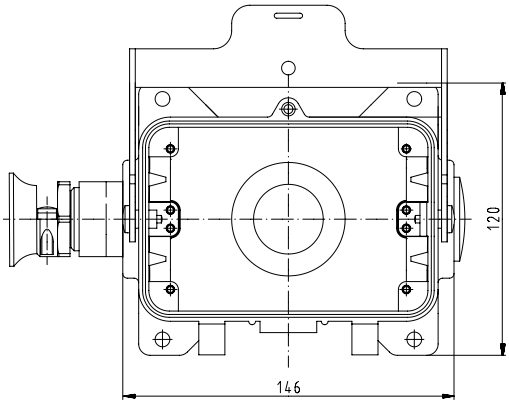

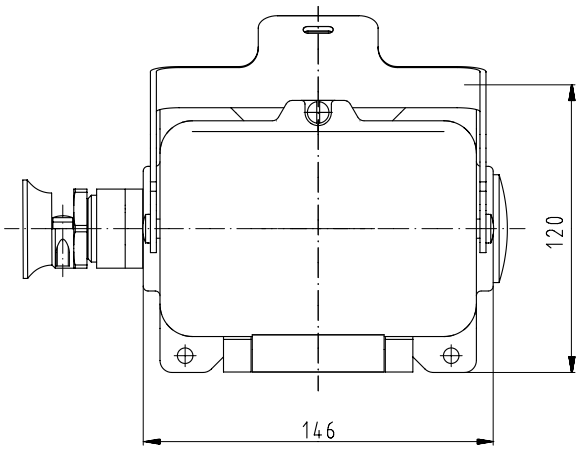

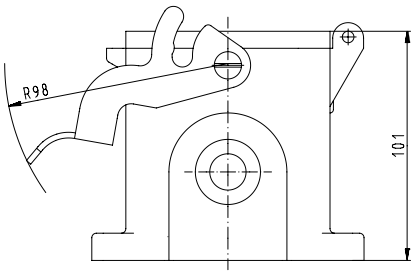

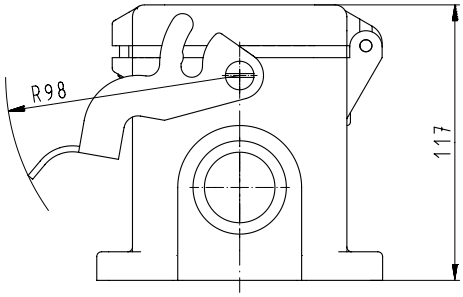

Multipole connector sets with 4 components screw connection 500 V / 16 A

Heavy duty connector kits, complete, consisting of:
male and female inserts, plugged together, loosely assembled into hoods and housings, and locked.

Screw connection

Screw connection

Housing	Number of poles	M	Part No.	P.U.	Female insert	Male insert
Size 6	6-pole + ground	20	99.700.0000.6	1	●	●
Size 10	10-pole + ground	20	99.701.0000.6	1	●	●
Size 16	16-pole + ground	25	99.702.0000.6	1	●	●
Size 24	24-pole + ground	25	99.703.0000.6	1	●	●
Size 6	6-pole + ground	25	99.706.0000.6	1	●	●
Size 10	10-pole + ground	25	99.707.0000.6	1	●	●
Size 16	16-pole + ground	32	99.708.0000.6	1	●	●
Size 24	24-pole + ground	32	99.709.0000.6	1	●	●
For technical information see the individual components					**70.300.xx40.0**	**70.310.xx.40.0**

● **Part of the set belonging to the order no.**

xx = 06 for 6-pole
10 for 10-pole
16 for 16-pole
24 for 24-pole

With metric cable entry on the side

With metric cable entry on the top

Open

Closed, with a metric cable entry

	Hood	Hood	Bottom base	Bottom base
	●		●	
	●		●	
	●		●	
	●		●	
	●		●	
	●		●	
	●		●	
	●		●	
	70.35x.xx35.0	**70.352.xx35.0**	**70.320.xx28.0**	**70.331.xx35.0**

revos accessories – all that you need

We offer a wide range of accessories in our portfolio of heavy duty connectors, such as DIN rail mounting frames, knock-out cover plates, coding pins, cable glands, covers for our housings, labeling accessories, and the related tools.

Mounting frames for *revos* contact inserts

The mounting frames of the ***revos*** BASIC family are ideal for use in low-voltage switching systems. They are mounted directly to the 35x15 DIN rail according to DIN EN 50022 inside the control cabinet. Use of the DIN rail mounting frame on a 7.5 mm high DIN-rail 35 x 7.5 in accordance with DIN EN 50022 is only possible if the installation space behind it is free.

The system has the following advantages:

- Reduction of material and mounting costs
- Simple and trouble-free installation
- Wire harness assemblies possible
- Easy troubleshooting with hinged top that enables access to the back of the connector.
- Re-wiring is possible without disconnecting.

The robust contact inserts of the ***revos*** family in use worldwide are used for this purpose.
The following contact inserts are available:

- ***revos*** BASIC
  Size 6, 10,16, 24
- ***revos*** POWER
  Size 16, 24
- ***revos*** HD
  40- and 64-pole
- ***revos*** FLEX
  Size 6, 10, 16, 24
- ***revos*** BASIC EE
  Size 6, 10, 16, 24
- ***revos*** DD
  Size 6, 10, 16, 24

Mounting frames without contact inserts

Size 6

Description	Type	Part No.	P.U.
Mountig frame			
Size 6		Z5.574.0653.0	1
Size 10		Z5.574.1053.0	1
Size 16		Z5.574.1653.0	1
Size 24		Z5.574.2453.0	1
Size 2 x 6		Z5.574.1253.0	1
Technical data			
Installation	on TS 35x15 mounting rail		

Description	Type	Part No.	P.U.
Accessories			
Mounting frame with base plate and installation bolts for open-bottom bases Size 6/10/16		Z5.574.0053.0	1
Mounting frame with base plate and installation bolts for open-bottom bases Size 24		Z5.574.0153.0	1

Dimensions

Mountig frame

Size 6

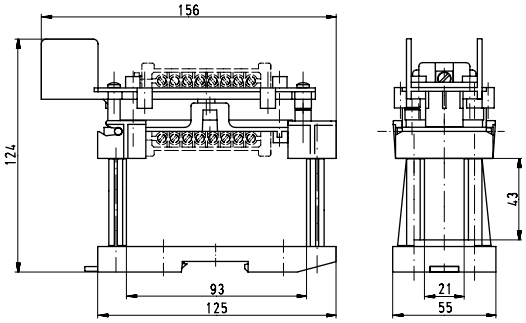

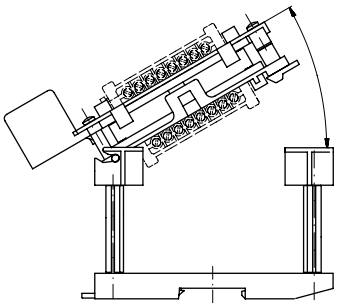

Size 2 x 6

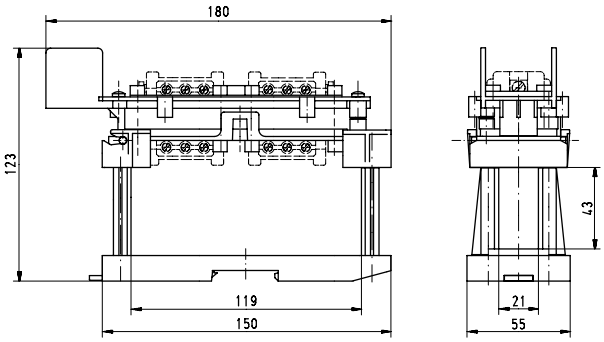

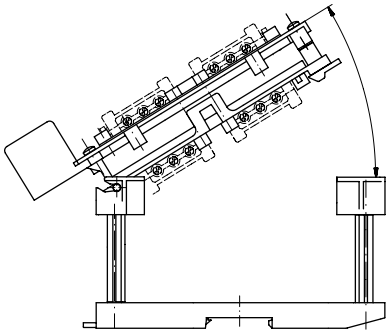

revos cover plates

Cover plates

Description	Type	Part No.	P.U.
Cover plates			
Size 6	Cover plate 6	07.416.6853.0	10
Size 10	Cover plate 10	07.416.6953.0	10
Size 16	Cover plate 16	07.416.7053.0	10
Size 24	Cover plate 24	07.416.7153.0	10

Technical data	
Material	Polyamide
Color	RAL 7032
Degree of protection	IP65
Flammability	UL94-V0

revos Cover plates are used to cover the cut-outs in partitions of control cabinets.

revos reducer plate

Reducer plate

Description	Type	Part No.	P.U.
Reducer plate			
GB 24/GB 6	Reduction plate 24 to 6	07.416.6353.0	10
GB 24/GB 10	Reduction plate 24 to 10	07.416.6453.0	10
GB 24/GB 16	Reduction plate 24 to 16	07.416.6553.0	10

Technical data	
Material	Polyamide
Color	RAL 7032
Degree of protection	IP65
Flammability	UL94-V0

revos reducer plate adapt the cut-outs of size 24 to sizes 6, 10 or 16.

Coding of *revos* multipole connectors

Each family of contact inserts has its unique design. Mismating of the different families' contact inserts is therefore impossible due to the design.

However, if several connectors or the same size and family are mounted directly adjacent to one another, mismating may occur during start-up of the machine or system.

In order to avoid mismating we developed coding bolts, coding pins and female coding pieces that are to beassembled instead of the regular mounting screws of the contact inserts.

Six different codings can be achieved when coding bolts are used.

Coding bolts of version A
Suitable for the following
contact inserts / multipole adapters:

- ***revos*** BASIC
- ***revos*** POWER
- ***revos*** HD
- ***revos*** FLEX
- ***revos*** Ex

that are mounted to the housing at the **front**.

Suitable for:

- Screw termination inserts with part numbers:
  70.2XX.XXXX.X
  70.3XX.XXXX.X
  70.4XX.XXXX.X
  72.2XX.XXXX.X
  72.3XX.XXXX.X
- Crimp termination inserts with part numbers:
  70.7XX.XXXX.X
  72.7XX.XXXX.X
  73.7XX.XXXX.X
- Spring clamp termination inserts with part numbers:
  70.5XX.XXXX.X
- Terminal block adapter inserts (mountable from the front) with part numbers:
  70.7XX.XXXX.X
  72.7XX.XXXX.X
  73.7XX.XXXX.X

Coding options also exist for combinations of screw and crimp inserts and terminal block adapters.

Coding bolts of version B
Suitable for the following
contact inserts / multipole adapters:

- ***revos*** BASIC
- ***revos*** POWER
- ***revos*** HD

that are mounted to the housing at the **rear**.
These are mainly multipole adapters that are mounted from the inside of the control cabinet.

Suitable for:

- Combination of screw, crimp, spring-type inserts and clamp adapters in connection with terminal block adapters (mountable from the back of the housing) with part numbers:
  70.9XX.XXXX.X
  72.9XX.XXXX.X
  73.1XX.XXXX.X

Six coding options by means of locking pins

With the use of locking pins, there are a total of six combinations for 3, 6, 10, 16, 24-pin plug connectors

An additional six combinations are possible for the heavy duty connectors with two contact inserts (20, 26, 32 and 48-pin plug connectors).

One contact insert

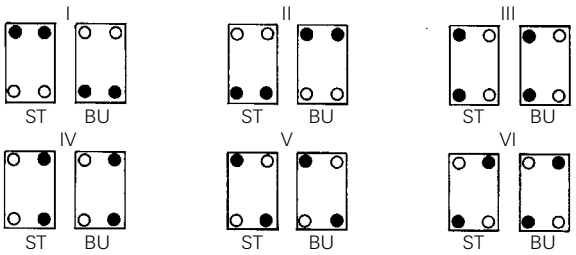

Two contact inserts

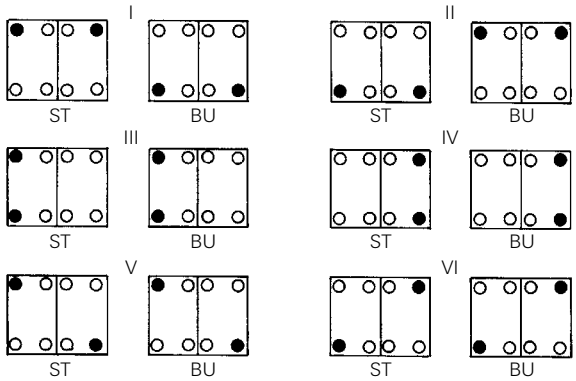

● Coding bolt
○ Mounting screws

ST Male connector
BU Female connector

Coding bolt

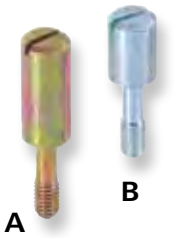

Description		Part No.	P.U.
Coding bolt			
Version A		05.592.0621.0	100
Version B		05.513.4212.0	100
Technical data			
Material	zinc-plated steel		
Color	shiny metal		

Screwdriver bit

Description		Part No.	P.U.
Screwdriver bit for lock bolt, version A + B			
Yellow marking		06.502.5510.0	1
Technical data			
Material	Sleeve from 1.2210 115CrV3 (silver steel)		
Sleeve	Hardened		

Dimensions

Version A

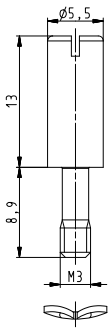

Version B

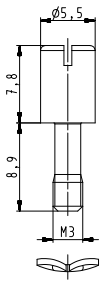

Screwdriver bit

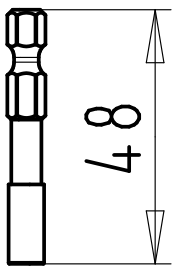

Coding options for *revos* multipole connectors

72 coding options by means of coding pin, coding key and coding socket

Part No. for Version A
Suitable for the following contact inserts/ multipole adapters:

revos BASIC, ***revos*** POWER, ***revos*** HD, ***revos*** FLEX, ***revos*** EX

that are mounted to the housing at the **front**.

Part No. for Version B
Suitable for the following contact inserts/ multipole adapters:

revos BASIC, ***revos*** POWER, ***revos*** HD

that are mounted to the housing at the **rear**.

The use of coding pins and female coding pieces enables 16 different coding options.

With an additional coding bolt up to 72 coding options are possible.

All mounting screws must be replaced by the coding components.

With 15- or 25-pin plug connectors of the series 73.7 … 16 coding options result, because the coding pin cannot be used here.

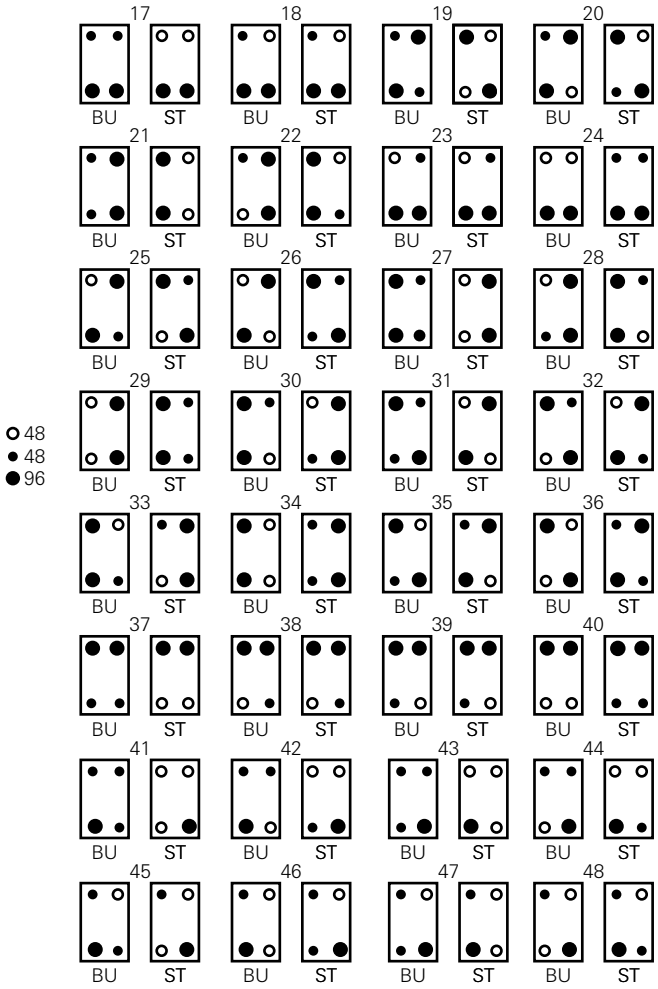

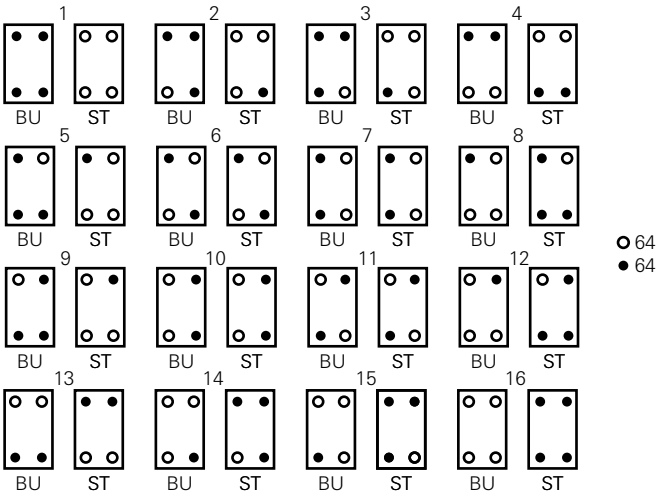

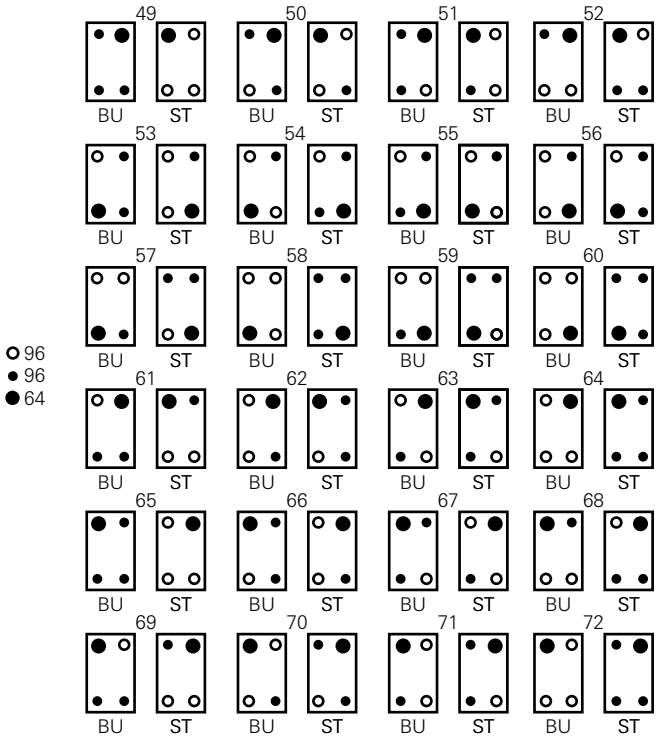

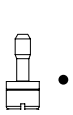

Coding bolt
05.576.8512

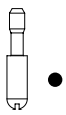

Coding pin
05.576.8312

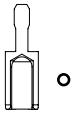

Female coding
piece 05.576.8412

Coding bolt, Coding pin and Female coding piece

Description		Type	Part No.	P.U.
Version A	Coding bolt		05.576.6912.0	50
	Coding pin		05.576.6612.0	50
	Female coding piece		05.576.6712.0	50
Version B	Coding bolt		05.576.8512.0	50
	Coding pin		05.576.8312.0	50
	Female coding piece		05.576.8412.0	50

Technical data	
Material	zinc-plated steel
Color	shiny metal

Screwdriver bit

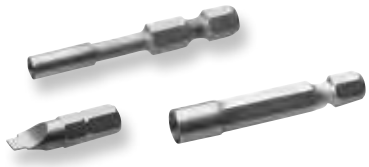

Description	Type	Part No.	P.U.
Screwdriver bit (white marking)	for female coding piece and bolt, version A + B	06.502.5410.0	1
Screwdriver bit (red marking)	for coding pin, version A + B	06.502.5310.0	1
Screwdriver blade	for female coding piece	05.567.5214.0	5

Technical data	
Werkstoff	Sleeve from 1.2210 115CrV3 (silver steel)
Sleeve	Hardened

Dimensions

Version A

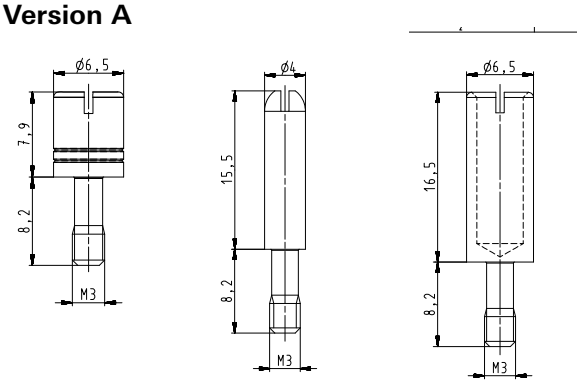

Version B

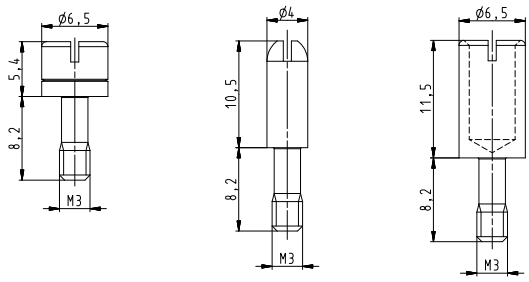

Coding plan:

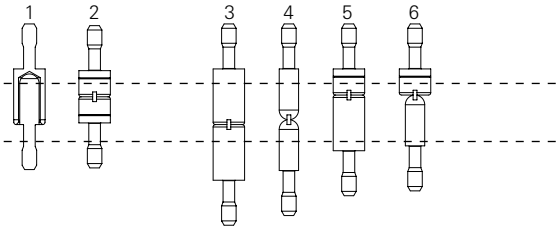

pluggable not pluggable

Screwdriver bit

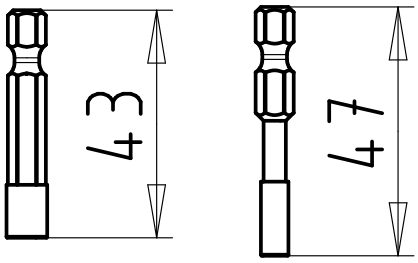

Screwdriver blade

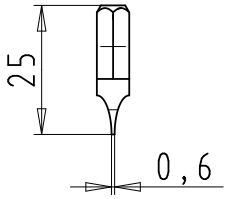

Example:

1

Coding between male and female connector matching

2

Coding between the coding bolts matching

5

Coding between the female connector and the coding bolt not matching

16 coding options for *revos* MINI 12-pole

Coding piece

Description	Type	Part No.	P.U.
Coding piece			
	MIN KOD 12	05.568.0353.0	20

Technical data	
Material	Poyamide
Make-up	4 coding pieces on the web

If the MIN KOD coding piece is used, there are 16 coding options for the ***revos*** MINI 12-pole.

Coding schematic:

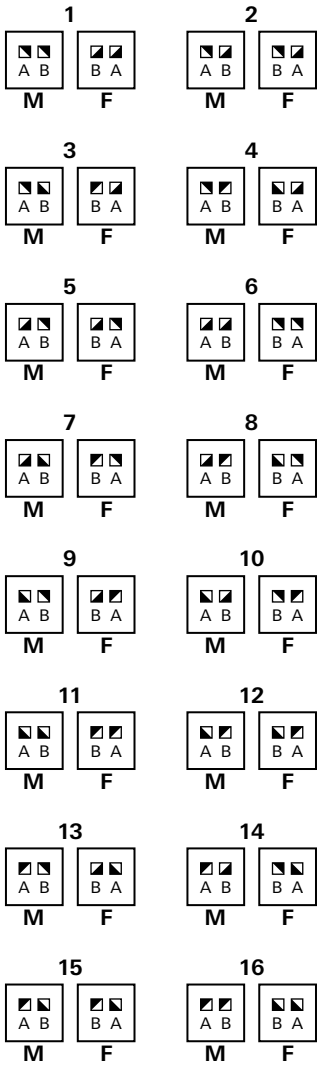

revos Docking frame

Docking frame

Description	Type	Part No.	P.U.
***revos* docking frame**			
Size 6	ADR 6	Z5.560.1019.0	1
Size 10	ADR 10	Z5.560.1119.0	1
Size 16	ADR 16	Z5.560.1219.0	1
Size 24	ADR 24	Z5.560.1319.0	1

Technical data	
Material	
Docking frame	Stainless steel
Fastening screws	Steel, galvanized
Floating tolerance	
x-axis	±1.5 mm
y-axis	±1.5 mm
Mechanical life	
Mating cycles	500
Scope of supply	
	1 docking frame, including 4 fastening screws M3
System features	
	For use in combination with ***revos*** BASIC, POWER, FLEX and DD contact inserts
	Symmetric design and hence "mutually-pluggable"
	Installation type can alter the air gap and creepage distances, and therefore influence the rated voltage.
	Mounting wall must be earthed due to the floating frame

Dimensions

Dimensional drawing

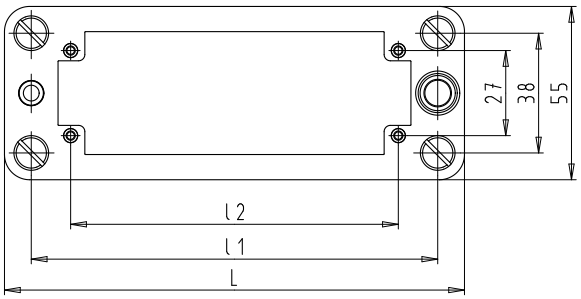

Size	L [mm]	L1 [mm]	L2 [mm]	a [mm]	b [mm]
6	86	69	44	54.5	84
10	99	82	57	67.5	97
16	119.5	102.5	77.5	88	117.5
24	146	129	104	114.5	144

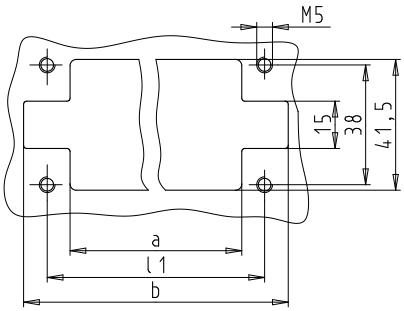

Metric cable glands

Cable glands IP68, plastic

Description	Type			Part No.	P.U.
Cable glands plastic					
	Cable Ø [mm]	SW [mm]	l [mm]		
M20x1,5	6 – 12	24	9	Z5.507.1353.0	10
M25x1,5	7 – 16	28	11	Z5.507.1553.0	10
M32x1,5	10 – 21	36	11	Z5.507.1753.0	10
M40x1,5	16 – 28	46	11	Z5.507.1953.0	1

Technical data	
Material	Polyamide
Color	RAL 7035
Degree of protection	IP68
Flammability	UL94-V0

Cable glands IP68, metal

Description	Type			Part No.	P.U.
Cable glands metal					
	Cable Ø [mm]	SW [mm]	l [mm]		
M20x1,5	8 – 13	22	6	Z5.507.1321.0	10
M25x1,5	11 – 17	27	8	Z5.507.1521.0	10
M32x1,5	15 – 21	34	8	Z5.507.1721.0	10
M40x1,5	19 – 27	44	8	Z5.507.1921.0	1

Technical data	
Material	nickel-plated brass
Color	-
Degree of protection	IP68
Flammability	-

Cable glands EMC IP68, metal

Description	Type			Part No.	P.U.
Cable glands metal					
	Cable Ø [mm]	SW [mm]	l [mm]		
M20x1,5	7.5 – 14	22	6	Z5.503.7221.0	10
M25x1,5	10 – 18	30	7	Z5.503.7321.0	10
M32x1,5	16 – 25	34	8	Z5.503.7421.0	10

Technical data	
Material	nickel-plated brass
Color	-
Degree of protection	IP68
Flammability	-

Dimensions

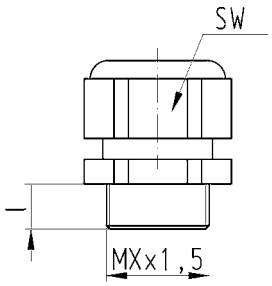

Strain relief, IP54

Brass cable glands, nickel-plated, metric

Cable gland, IP54, with strain relief

Name	Type				Part No.	P.U.
Cable gland metal						
	Cable Ø [mm]	L [mm]	l [mm]	SW [mm]		
M20x1.5	6.5 – 11.5	25	6	24	Z5.507.5821.0	1
M25x1.5	9 – 20	29	7	34	Z5.507.6021.0	1
M32x1.5	17 – 28	32	8	42	Z5.507.6221.0	1
M40x1.5	23 – 35	40	8	52	Z5.507.6421.0	1

Technical data	
Material	Brass, nickel-plated
Color	-
Degree of protection	IP54
Flammability	-

Bushing, IP54

Name	Type				Part No.	P.U.
Bushing metal						
	Cable Ø [mm]	L [mm]	l [mm]	SW [mm]		
M16x1.5	3 – 9	15	5	16	Z5.507.2121.0	1
M20x1.5	4 – 13	17.5	6	20	Z5.507.2221.0	1
M25x1.5	8.5 – 17.5	20	7	25	Z5.507.2321.0	1
M32x1.5	16 – 25	23	8	32	Z5.507.2421.0	1

Technical data	
Material	Brass, nickel-plated
Color	-
Degree of protection	IP54
Flammability	-

Strain relief, IP54

Name	Type				Part No.	P.U.
Cable gland metal						
	Cable Ø [mm]	L [mm]	l [mm]	SW [mm]		
M16x1.5	4 – 9	29	5	18	Z5.507.9521.0	10
M20x1.5	6.5 – 13.5	33	6	22	Z5.507.9621.0	10
M25x1.5	9 – 20	38	7	30	Z5.507.9721.0	10
M32x1.5	17 – 26	43	8	36	Z5.507.9821.0	10

Technical data	
Material	Brass, nickel-plated
Color	-
Degree of protection	IP54
Flammability	-

Dimensions

Cable gland, IP54, with strain relief, metal

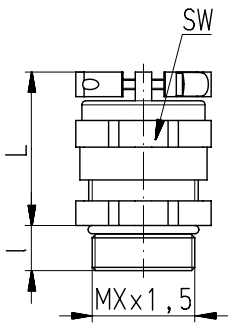

Cable gland, IP54, metal

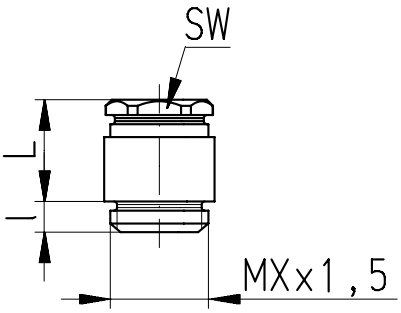

Strain relief, IP54, metal

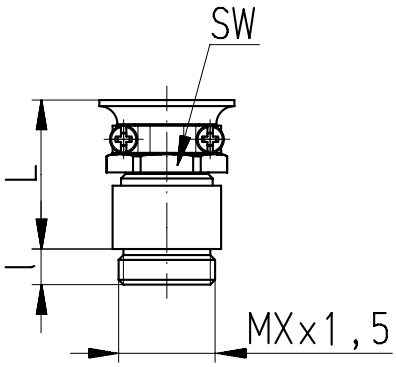

Cable glands, Accessories

Reduction piece, nickel-plated brass

Description	Type			Part No.	P.U.
Reduction piece					
External thread [AG]	Internal thread [IG]	D [mm]	l [mm]		
M20x1.5	M16x1.5	22	6	05.507.9021.0	1
M25x1.5	M20x1.5	27	7	05.507.9121.0	1
M32x1.5	M25x1.5	34	8	05.507.9221.0	1
M40x1.5	M32x1.5	43	8	05.507.9321.0	1

Technical data	
Material	nickel-plated brass
Color	-
Degree of protection	-
Flammability	-

Expansion piece, nickel-plated brass

Description	Type			Part No.	P.U.
Erweiterung					
External thread [AG]	Internal thread [IG]	D [mm]	l [mm]		
M16x1.5	M20x1.5	22	5	05.507.8621.0	1
M20x1.5	M25x1.5	27	6	05.507.8721.0	1
M25x1.5	M32x1.5	34	7	05.507.8821.0	1
M32x1.5	M40x1.5	43	8	05.507.8921.0	1

Technical data	
Material	nickel-plated brass
Color	-
Degree of protection	-
Flammability	-

Adapter for PG-metric conversion

Description	Type			Part No.	P.U.
Adapter PG					
External thread [AG]	Internal thread [IG]	D [mm]	l [mm]		
PG 13.5	M20x1.5	26	6.5	05.507.7621.0	1
PG 16	M20x1.5	24	6.5	05.507.7721.0	1
PG 21	M25x1.5	30	7	05.507.7821.0	1

Technical data	
Material	nickel-plated brass
Color	-
Degree of protection	-
Flammability	-

Adapter for metric-PG conversion

Description	Type			Part No.	P.U.
Adapter metrisch					
External thread [AG]	Internal thread [IG]	D [mm]	l [mm]		
M20x1.5	PG 13.5	22	6	05.507.8121.0	1
M20x1.5	PG 16	24	6	05.507.8221.0	1
M25x1.5	PG 21	30	7	05.507.8321.0	1
M32x1.5	PG 29	39	8	05.507.8421.0	1

Technical data	
Material	nickel-plated brass
Color	-
Degree of protection	-
Flammability	-

Dimensions

Reduction piece, nickel-plated brass

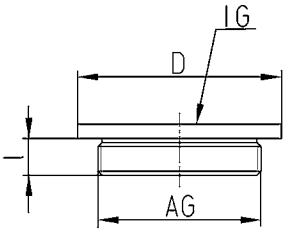

Expansion piece, nickel-plated brass

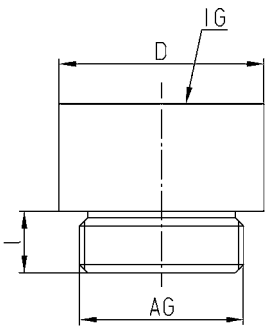

Adapter for PG-metric conversion

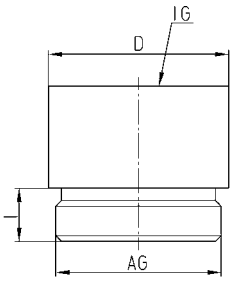

Adapter for metric-PG conversion

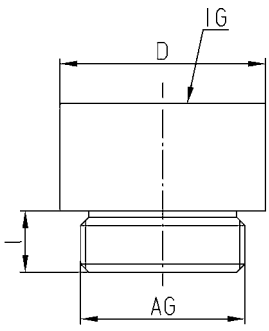

Cable glands, Accessories

Blind piece with gasket, brass

Description	Type			Part No.	P.U.
Blind piece brass					
Thread [AG]	D [mm]	l [mm]			
M20x1.5	22	6.5		05.507.4021.0	1
M25x1.5	28	7		05.507.4121.0	1
M32x1.5	35	8		05.507.4221.0	1
M40x1.5	44	8.5		on request	

Technical data	
Material	nickel-plated brass
Color	Metalic
Degree of protection	IP68
Flammability	-

Blind piece with gasket, plastic

Description	Type		Part No.	P.U.
Blind piece plastic				
Thread [AG]	D [mm]	l [mm]		
M20x1.5	24	6	05.507.4053.0	1
M25x1.5	30	7	05.507.4153.0	1
M32x1.5	38	8	05.507.4253.0	1
M40x1.5	48	9	05.507.4353.0	1

Technical data	
Material	Polyamide
Color	gray, RAL 7035
Degree of protection	IP68
Flammability	UL94-V0

Dimensions

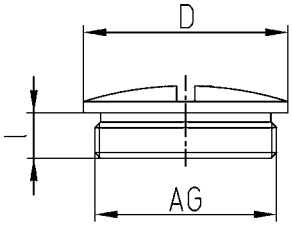

Protective covers without locking levers for *revos* BASIC Housings

Protective covers without locking levers

Double locking lever Size 10

without gasket with tether cord and loop

Double locking lever Size 16

without gasket with tether cord

Double locking lever Size 10

with gasket

Description	Type	Part No.	P.U.
***revos* protective cover**			
for single locking lever, without gasket			
Size 6	BAS AD DI 06	07.409.7056.0	10
Size 10	BAS AD DI 10	07.428.5553.0	10
Size 16	BAS AD DI 16	07.428.5653.0	10
Size 24	BAS AD DI 24	07.428.5753.0	10
with tether cord + loop			
Size 6	BAS AD DI 06 FSR	Z7.416.1556.0	10
for single locking lever, with gasket			
Size 6	BAS AD DB 06	Z7.427.8053.0	10
with tether cord + loop			
Size 6	BAS AD DJ 06 FSR	Z7.429.0453.0	10
for double locking lever, without gasket			
Size 10	BAS AD DA 10	07.409.7156.0	10
Size 16	BAS AD DA 16	07.409.7256.0	10
Size 24	BAS AD DA 24	07.409.7356.0	10
with tether cord			
Size 10	BAS AD DA 10 FS	Z7.409.8756.0	10
Size 16	BAS AD DA 16 FS	Z7.409.8856.0	10
Size 24	BAS AD DA 24 FS	Z7.409.8956.0	10
with tether cord + loop			
Size 10	BAS AD DA 10 FSR	Z7.416.1656.0	10
Size 16	BAS AD DA 16 FSR	Z7.416.1756.0	10
Size 24	BAS AD DA 24 FSR	Z7.416.1856.0	10
for double locking lever, with gasket			
Size 10	BAS AD DB 10	Z7.427.8153.0	10
Size 16	BAS AD DB 16	Z7.427.8253.0	10
Size 24	BAS AD DB 24	Z7.427.8353.0	10
with tether cord			
Size 10	BAS AD DB 10 FS	Z7.429.0153.0	10
Size 16	BAS AD DB 16 FS	Z7.429.0253.0	10
Size 24	BAS AD DB 24 FS	Z7.429.0353.0	10
with tether cord + loop			
Size 10	BAS AD DB 10 FSR	Z7.429.0553.0	10
Size 16	BAS AD DB 16 FSR	Z7.429.0653.0	10
Size 24	BAS AD DB 24 FSR	Z7.429.0753.0	10

Technical data	
Material/Gasket	Polyamide/NBR
Color	silver gray, RAL 7001
Degree of protection	IP65
Flammability	UL94-V0

Dimensions

Single locking lever without clamp

Size	L1 [mm]	L2 [mm]
6	62.5	75
10	75.5	90
16	96	110.5
24	122.5	137

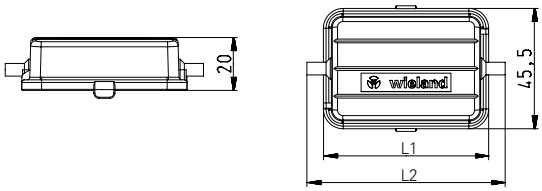

Double locking lever without clamp

Size	L3 [mm]
10	75.5
16	96
24	122.5

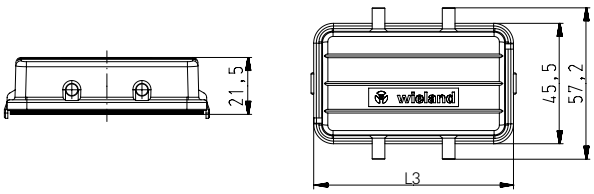

tether cord

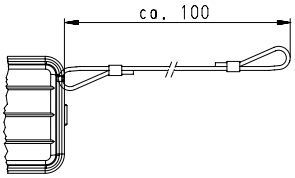

tether cord + loop

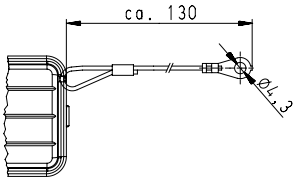

Protective covers with locking levers for *revos* BASIC Housings

Protective covers with locking levers

Double locking lever
Size 10
Plastic locking levers, with gasket

Double locking lever
Size 10
steel locking levers, with gasket

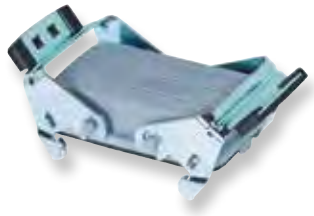

Double locking lever
Size 10
stainless steel locking levers, with gasket

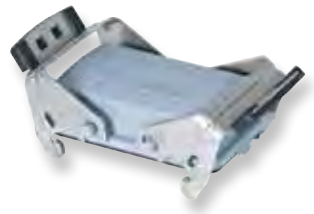

Description	Type	Part No.	P.U.
***revos* protective cover**			
for single locking lever, with gasket			
plastic locking levers			
Size 6	BAS AD DH 06 PA	Z7.428.1153.0	10
Size 10	BAS AD DH 10 PA	Z7.428.5553.0	10
Size 16	BAS AD DH 16 PA	Z7.428.5653.0	10
Size 24	BAS AD DH 24 PA	Z7.428.5753.0	10
steel locking levers			
Size 6	BAS AD DH 06 ST	Z7.428.1110.0	10
stainless steel locking levers			
Size 6	BAS AD DG 06 VA	Z7.428.1119.0	10
for double locking lever, with gasket			
plastic locking levers			
Size 10	BAS AD DD 10 PA	Z7.428.1253.0	10
Size 16	BAS AD DD 16 PA	Z7.428.1353.0	10
Size 24	BAS AD DD 24 PA	Z7.428.1453.0	10
steel locking levers			
Size 10	BAS AD DD 10 ST	Z7.428.1210.0	10
Size 16	BAS AD DD 16 ST	Z7.428.1310.0	10
Size 24	BAS AD DD 24 ST	Z7.428.1410.0	10
stainless steel locking levers			
Size 10	BAS AD DD 10 VA	Z7.428.1219.0	10
Size 16	BAS AD DD 16 VA	Z7.428.1319.0	10
Size 24	BAS AD DD 24 VA	Z7.428.1419.0	10
for double locking lever, without gasket			
plastic locking levers			
Size 10	BAS AD DC 10 PA	Z7.428.1653.0	10
Size 16	BAS AD DC 16 PA	Z7.428.1753.0	10
Size 24	BAS AD DC 24 PA	Z7.428.1853.0	10

Technical data	
Material/Gasket	Polyamide/NBR
Color	silver gray, RAL 7001
Degree of protection	IP65
Flammability	UL94-V0

Dimensions

Single locking lever with clamp, plastic

Size	L1 [mm]	L2 [mm]
6	62.5	75
10	75.5	90
16	96	110.5
24	122.5	137

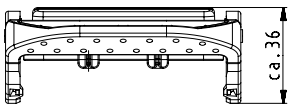

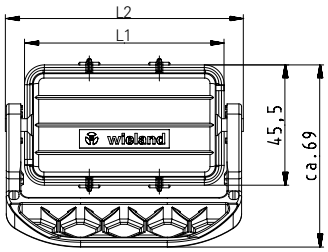

Double locking lever with clamp, plastic

Size	L3 [mm]	L4 [mm]
10	75.5	119
16	96	140
24	122.5	166

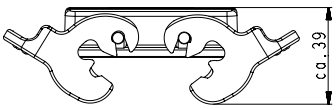

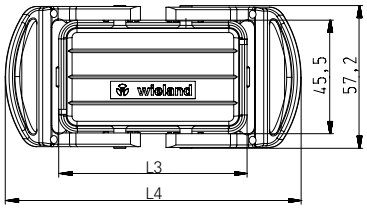

Protective cover for *revos* BASIC Housings Size 32

Protective covers without locking levers, without gasket

Protective covers with locking levers, with gasket

Description	Type	Part No.	P.U.
***revos* protective cover with tether cord + loop**			
without locking levers, without gasket			
Size 32	BAS AD DA 32 FS ST	Z7.419.6228.0	10
with locking levers, with gasket			
Size 32	BAS AD DD 32 FS ST	Z7.419.6128.0	10

Technical data	
Material	Die cast aluminum
Surface	Silicon-free
Locking levers	Zinc-plated steel
Gasket	NBR
Degree of protection	IP65

Dimensions

Protective covers without locking levers

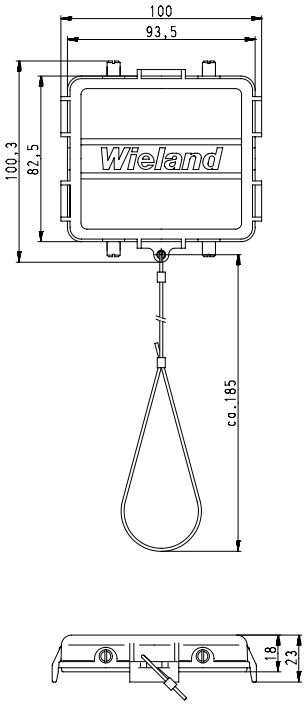

Protective cover with locking levers

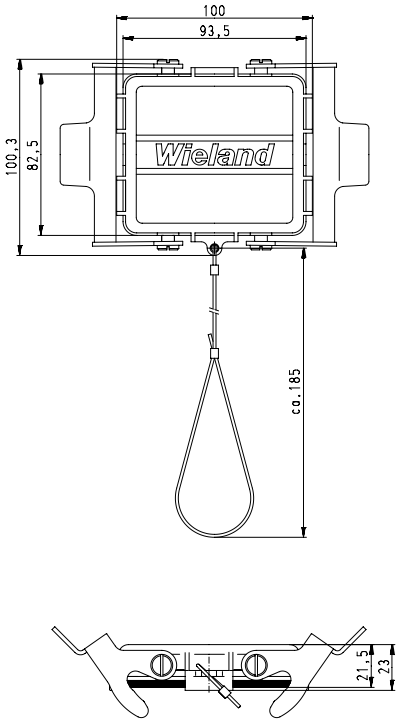

Protective cover for *revos* BASIC Housings Size 6–24

Protective cover latchable

Description	Type	Part No.	P.U.
Protective cover rastbar			
Size 6/6H	BAS AD DK 06	Z7.409.7056.0	10
Size 10/10H	BAS AD DL 10	Z7.409.7156.0	10
Size 16/16H	BAS AD DL 16	Z7.409.7256.0	10
Size 24/24H	BAS AD DL 24	Z7.409.7356.0	10

Technical data	
Material	Polyamide
Color	RAL 7001
Degree of protection	-
Flammability	-

Dimensions

Protective cover latchable

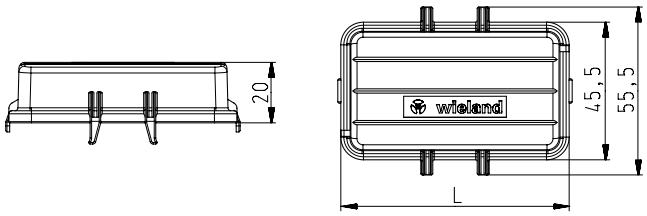

Protective cover for *revos* MINI Housings

Protective cover without gasket

Protective cover with gasket (on the inside)

Description	Type	Part No.	P.U.
Protective cover for *revos* MINI Housings			
without gasket for male insert			
plastic	MIN AD DA 7 P	07.417.6753.0	10
Metal	MIN AD DA 7 Z	07.417.6729.0	10
with gasket for female insert			
plastic	MIN AD DB 7 P	07.417.6853.0	10
Metal	MIN AD DB 7 Z	07.417.6829.0	10

Technical data	
Material	Die cast zinc alloy/Polyamide
Surface	Silicon-free
Locking levers	-
Gasket	NBR
Degree of protection	IP65

Dimensions

Protective cover

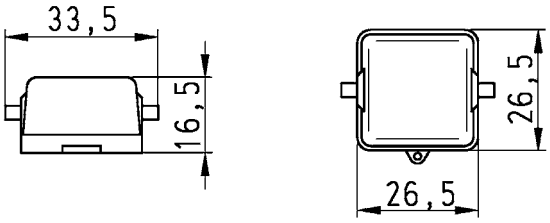

Tools and Accessoires

Crimping tool kit

Description	Type	Part No.	P.U.
Crimping tool for *revos* contacts			
Crimping tool without crimping die and positioner		95.101.0800.0	1
Accessoires for crimping tool see page 304.			

For assignment of contacts to crimping tool see page 305.

Stripping tool

Description	Type	Part No.	P.U.
Tool			
Stripping tool	0.08 – 10mm² / 28 – 7 AWG	95.350.0100.0	1

Hand crimping tool

Description	Type	Part No.	P.U.
Crimping tool for contacts Ø 1 mm see page 96.			
Hand crimping tool without contact positioner		95.101.2100.0	1
Hand crimping tool with contact positioner		95.101.2200.0	1

Screwdriver

Description	Type	Part No.	P.U.
Tool			
Screwdriver	Blade 0.6x3.5 form “B“	06.502.4000.0	5

For use with contact inserts and multipole adapters with spring clamp connection

Axial screwdriver

Description	Type	Part No.	P.U.
Tool			
Axial screwdriver	POW AXIALSHR ISK SW2	05.502.4500.0	5

Extraction tool

Description	Type	Part No.	P.U.
Tool			
Extraction tool	HD	05.502.0000.0	1
Extraction tool	500/690V-SER.	05.502.3500.0	1
Extraction tool		05.502.4400.0	1

Jumper bar for *revos* BASIC multipole adapters

Description	Type	Part No.	P.U.
Insulated jumper bar for *revos* BASIC multipole adapters			
Number of poles			
2-pole		Z7.256.0227.0	10
3-pole		Z7.256.0327.0	10
6-pole		Z7.256.0627.0	10
8-pole		Z7.256.0827.0	10
12-pole		Z7.256.1227.0	10

Technical data	
Material	Polyamide
Rated voltage	500 V
Rated current	16 A

Marking tag carriers

Marking tag carriers for multipole adapters

Description		Type	Part No.	P.U.
Marking tag carriers, complete				
40-pole			Z4.242.3753.0	10
64-pole			Z4.242.4053.0	10
Marking tags				
Single tag, max. 3-digits				
unmarked	marking field 8.3x4.5 mm	9705 A	04.242.0850.0	500
Single tag, max. 8-digits				
unmarked	marking field 14x4.5 mm	9705 AL	04.242.1553.0	500
Marking strip with 12 tags, 6.7 mm spacing				
unmarked	marking field 8.3x6.45 mm	9705A/6,7/12	04.242.6753.0	25
marked	1 – 9	9705A/6,7/12 B 1- 9	99.000.0920.8	25

45° Marking tag carrier

Description		Type	Part No.	P.U.
Marking tag carriers				
2x4-digits, 45°		9705 A/4 W	04.242.2853.0	200
Marking tags				
Single tag, max. 3-digits				
unmarked	marking field 8.3x4.5 mm	9705 A	04.242.0850.0	500
Single tag, max. 8-digits				
unmarked	marking field 14x4.5 mm	9705 AL	04.242.1553.0	500
Marking strip with 12 tags, 6.7 mm spacing				
unmarked	marking field 8.3x6.45 mm	9705A/6,7/12	04.242.6753.0	25
marked	1 – 9	9705A/6,7/12 B 1- 9	99.000.0920.8	25
Marking strip with 12 tags, 6.7 mm spacing				
24-pole	marked 1 – 24	9705A/6,7/2X12 B 1-24	99.005.0920.8	25

Marking tags

Tear-off marking strip

Description	Contents	Type	Part No.	P.U.
Marking tags-Ast				
unmarked		9704 A	04.241.1150.0	25
marked with the same number				
	10x “1“	9704 A/1 B	04.841.1150.0	25
	10x “2“	9704 A/2 B	04.841.1250.0	25
	10x “3“	9704 A/3 B	04.841.1350.0	25
	10x “4“	9704 A/4 B	04.841.1450.0	25
	10x “5“	9704 A/5 B	04.841.1550.0	25
	10x “6“	9704 A/6 B	04.841.1650.0	25
	10x “7“	9704 A/7 B	04.841.1750.0	25
	10x “8“	9704 A/8 B	04.841.1850.0	25
	10x “9“	9704 A/9 B	04.841.1950.0	25
	10x “0“	9704 A/0 B	04.841.2050.0	25
marked with consecutive numbers	1 2 3 4 5 6 7 8 9 0	9704 A/1-0 B	04.841.2150.0	25
marked with the same uppercase letters				
	10x “A“	9704 A/AG B	04.841.2250.0	25
	10x “B“	9704 A/BG B	04.841.2350.0	25
	10x “C“	9704 A/CG B	04.841.2450.0	25
	10x “D“	9704 A/DG B	04.841.2550.0	25
	10x “E“	9704 A/EG B	04.841.2650.0	25
	10x “F“	9704 A/FG B	04.841.2750.0	25
	10x “G“	9704 A/GG B	04.841.2850.0	25
	10x “H“	9704 A/HG B	04.841.2950.0	25
	10x “I“	9704 A/IG B	04.841.3050.0	25
	10x “J“	9704 A/JG B	04.841.3150.0	25
	10x “K“	9704 A/KG B	04.841.3250.0	25
	10x “L“	9704 A/LG B	04.841.3350.0	25
	10x “M“	9704 A/MG B	04.841.3450.0	25
	10x “N“	9704 A/NG B	04.841.3550.0	25
	10x “O“	9704 A/OG B	04.841.3650.0	25
	10x “P“	9704 A/PG B	04.841.3750.0	25
	10x “Q“	9704 A/QG B	04.841.3850.0	25
	10x “R“	9704 A/RG B	04.841.3950.0	25
	10x “S“	9704 A/SG B	04.841.4050.0	25
	10x “T“	9704 A/TG B	04.841.4150.0	25
	10x “U“	9704 A/UG B	04.841.4250.0	25
	10x “V“	9704 A/VG B	04.841.4350.0	25
	10x “W“	9704 A/WG B	04.841.4450.0	25
	10x “X“	9704 A/XG B	04.841.4550.0	25
	10x “Y“	9704 A/YG B	04.841.4650.0	25
	10x “Z“	9704 A/ZG B	04.841.4750.0	25

Marking tags

Tear-off marking strip

Description	Contents	Type	Part No.	P.U.
marked with the same lowercase letters				
	10x “a“	9704 A/AK B	04.841.4850.0	25
	10x “b“	9704 A/BK B	04.841.4950.0	25
	10x “c“	9704 A/CK B	04.841.5050.0	25
	10x “d“	9704 A/DK B	04.841.5150.0	25
	10x “e“	9704 A/EK B	04.841.5250.0	25
	10x “f“	9704 A/FK B	04.841.5350.0	25
	10x “g“	9704 A/GK B	04.841.5450.0	25
	10x “h“	9704 A/HK B	04.841.5550.0	25
	10x “i“	9704 A/IK B	04.841.5650.0	25
	10x “j“	9704 A/JK B	04.841.5750.0	25
	10x “k“	9704 A/KK B	04.841.5850.0	25
	10x “l“	9704 A/LK B	04.841.5950.0	25
	10x “m“	9704 A/MK B	04.841.6050.0	25
	10x “n“	9704 A/NK B	04.841.6150.0	25
	10x “o“	9704 A/OK B	04.841.6250.0	25
	10x “P“	9704 A/PK B	04.841.6350.0	25
	10x “q“	9704 A/QK B	04.841.6450.0	25
	10x “r“	9704 A/RK B	04.841.6550.0	25
	10x “s“	9704 A/SK B	04.841.6650.0	25
	10x “t“	9704 A/TK B	04.841.6750.0	25
	10x “u“	9704 A/UK B	04.841.6850.0	25
	10x “v“	9704 A/VK B	04.841.6950.0	25
	10x “w“	9704 A/WK B	04.841.7050.0	25
	10x “x“	9704 A/XK B	04.841.7150.0	25
	10x “y“	9704 A/YK B	04.841.7250.0	25
	10x “z“	9704 A/ZK B	04.841.7350.0	25
marked with the same symbols				
	10x “+“	9704 A/+ B	04.841.7450.0	25
	10x “-“	9704 A/- B	04.841.7550.0	25
	10x “/“	9704 A// B	04.841.7650.0	25
	10x “.“	9704 A/. B	04.841.7750.0	25
Large packs				
Same numbers = 10 x 25 strips = 2500 tags	1 1 1 ... 0 0 0	111..BIS 000..	04.841.9050.0	1
Uppercase letters = 26 x 25 strips = 6500 tags	A A A ... Z Z Z	A BIS Z GB	04.841.9150.0	1


wieland

***revos facts*&DATA**

On the following pages, you will find all important information on our ***revos*** products.

But our Wieland customer service team is also happy to help you, at telephone number +49 951 9324-991.

We look forward to hearing from you.

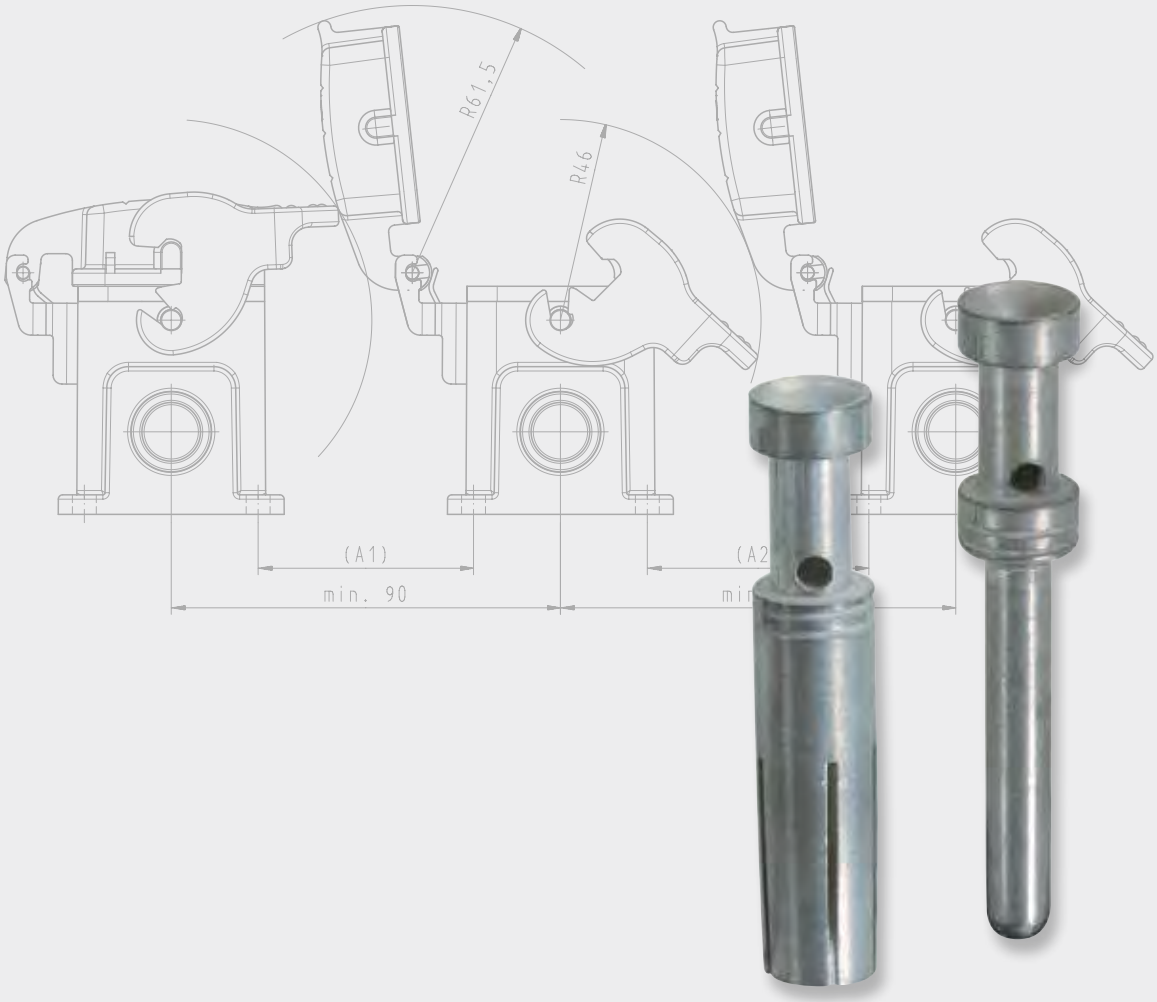

Conductor connections

Rated connection capacity and suitable conductor

Table 1: (EN 60 999-1: 2000): Relationship between rated connection capacity and diameter of the conductor

Rated connection capacity	Theoretical diameter of the largest conductor							Connectable conductor	
	Metric			AWG					
	Rigid		Flexible		Rigid		Flexible	Rigid	Flexible
	Solid	Multistrand			Solid	Multistrand	Multistrand	Must be set in the relevant product standard	
mm^2	mm	mm	mm	Conductor size	mm	mm	mm		
0.2	0.51	0.53	0.61	24	0.54	0.61	0.64		
0.34	0.63	0.66	0.8	22	0.68	0.71	0.80		
0.5	0.9	1.1	1.1	20	0.85	0.97	1.02		
0.75	1.0	1.2	1.3	18	1.07	1.23	1.28		
1.0	1.2	1.4	1.5	-	-	-	-		
1.5	1.5	1.7	1.8	16	1.35	1.55	1.60		
2.5	1.9	2.2	2.3 [a]	14	1.71	1.95	2.08		
4.0	2.4	2.7	2.9 [a]	12	2.15	2.45	2.70		
6.0	2.9	3.3	3.9 [a]	10	2.72	3.09	3.36		
10.0	3.7	4.2	5.1	8	3.34	3.89	4.32		
16.0	4.6	5.3	6.3	6	4.32	4.91	5.73		
25.0	-	6.6	7.8	4	5.45	6.18	7.26		
35	-	7.9	9.2	2	6.87	7.78	9.02		
					[b]	[b] / Class B	[c] / Class I, K, M		

Note: The diameters of the largest rigid and flexible conductors are based on Table 1 in accordance with IEC 60 228A and IEC 30 344 and for AWG conductors on ASTM B 172-71 [4], ICEA Publication S-19-81 [5], ICEA Publication S-66-524 [6], and ICEA Publication S-66-516 [7]

[a] Dimensions only for flexible cables of class 5 in accordance with IEC 60 228A.
[b] Nominal diameter + 5%
[c] Largest diameter for each of the three classes I, K, M, + 5%

Theoretical diameter of the largest conductor and relationship between rated cross section and connectable conductors

Table 2: (EN 60 999-2: 2003): Relationship between rated cross section and diameter of the conductors

Rated cross section	Theoretical diameter of the largest conductor		Connectable conductor	
	Metric			
	Rigid	Flexible [a]	Rigid	Flexible
	Multistrand		Must be set in the relevant product standard	
mm^2	mm	mm		
50	9.1	11.0		
70	11.0	13.1		
95	12.9	15.1		
-	-	-		
120	14.5	17.0		
150	16.2	19.0		
185	18.0	21.0		
-	-	-		
240	20.6	24.0		
300	23.1	27.0		

Note: The diameters of the largest rigid and flexible conductors are based on Table 1 and Table 3 of IEC 60 228A.

[a] Dimensions only for flexible conductors of class 5 in accordance with IEC 60 228A.

Conductor connections

Standard cross sections of round copper conductors AWG/metric

Metric size ISO	Comparison between AWG/kcmil and metric sizes		
mm²	AWG	kcmil	mm²
0.1 *	28		0.081
0.14 *	26		0.128
0.2	24		0.205
-	22		0.324
0.5	20		0.519
0.75	18		0.82
1	-		-
1.5	16		1.3
2.5	14		2.1
4	12		3.3
6	10		5.3
10	8		8.4

Metric size ISO	Comparison between AWG/kcmil and metric sizes		
mm²	AWG	kcmil	mm²
16	6		13.3
25	4		21.2
.5	2		33.6
50	(1/0) 0		53.5
70	(2/0) 00		67.4
95	(3/0) 000		85
-	(4/0) 0000		107.2
120		250	127
150		300	152
185		350	177
240		500	253
300		600	304

* not standardized

Composition and dimensions of single, multi, fine and extra-fine-wire conductors made of copper

Extract from DIN VDE 0295 (06.92)

Nominal cross section	Solid		Multistrand		Fine strand	
	Maximum dimen-sion diameter	Number of wires	Maximum dimen-sion diameter	Number of wires	Maximum dimen-sion diameter	Reference number of wires
mm²		mm	-	mm		
0.5	0.9	1	-	-	1.1	16
0.75	1.0	1	-	-	1.3	24
1	1.2	1	-	-	1.5	32
1.5	1.5	1	-	-	1.8	30
2.5	1.9	1	-	-	2.3	50
4	2.4	1	-	-	2.9	56
6	2.9	1	-	-	3.9	84
10	3.7	1	4.2	7	5.1	80
16	4.6	1	5.3	7	6.3	126
25	-	-	6.6	7	7.8	196
35	-	-	7.9	7	9.2	276
50	-	-	9.1	19	11	396
70	-	-	11	19	13.1	360
95	-	-	12.9	19	15.1	475
120	-	-	14.5	37	17	608
150	-	-	16.2	37	19	756
185	-	-	18	37	21	925
240	-	-	20.6	61	24	1224

Current load capacity of cables or lines

Recommended values for current load capacity of cables or lines for fixed installation and open-air installation should be taken from DIN VDE 0298 Part4/08.2003

Tightening torque

Tightening torque of screw connections

Extract from EN 60 947-1

Tightening torque for proving the mechanical tightness of screw connections

Table 4: Tightening torques for proving the mechanical tightness of screw connections/terminals

Thread diameter		Tightening torque (Nm)		
Metric standard values	Diameter range	I	II	III
1.6	1.6	0.05	0.1	0.1
2.0	1.6 to 2.0	0.1	0.2	0.2
2.5	2.0 to 2.8	0.2	0.4	0.4
3.0	2.8 to 3.0	0.25	0.5	0.5
-	3.0 to 3.2	0.3	0.6	0.6
3.5	3.2 to 3.6	0.4	0.8	0.8
4	3.6 to 4.1	0.7	1.2	1.2
4.5	4.1 to 4.7	0.8	1.8	1.8
5	4.7 to 5.3	0.8	2.0	2.0
6	5.3 to 6.0	1.2	2.5	3.0
8	6.0 to 8.0	2.5	3.5	6.0
10	8.0 to 10.0	-	4.0	10.0
12	10 to 12	-	-	14.0
14	12 to 15	-	-	19.0
16	15 to 20	-	-	25.0
20	20 to 24	-	-	36.0
24	24	-	-	50.0

Column I: Applies for screws without heads that do not protrude from the thread hole and for screws that can only be tightened with screwdrivers with an edge narrower than the screw's thread core diameter.

Column II: Applies for nuts and screws that are tightened with screwdrivers.

Column III: Applies for nuts and screws that can be tightened with tools other than screwdrivers.

Definition of the IP degrees of protection

For applications in industrial environments, degrees of protections and standards were defined that specify the environmental impact regarding contact, protection against foreign bodies and humidity to which a system can be exposed without being damaged. The degrees of protection are defined in the IP standard of DIN EN 60 529: degrees of protection achieved through housings (IP code).

The IP code consists of a two-digit number that indicates the relevant protection degree. The first digit specifies the protection degree for the protection against contact and foreign bodies while the second digit specifies the protection against water and humidity.

Practical notes:

For "normal" industrial systems where multipole connectors are used in closed factory halls, protection according to IP54 is normally offered = protected against dust + protected against splashing water. This protection is normally completely sufficient. For systems in outdoor applications (vehicles, snow guns, etc.) we recommend protection according to IP65 = dustproof + protected against jets of water. A protection according to IP67 or IP68 is required for only a few outdoor applications unless a continuous immersion of the components cannot be avoided.

The following tables are to describe the protection degrees in detail:

Table 1: Protection against contact and foreign bodies

1st	Protection against accidental contact	Protection against foreign bodies
0	No protection	No protection
1	Protection against contact with large parts of the body, for example the back of the hand	Protection against foreign bodies with a diameter of 50 mm and larger.
2	Protection against contact with the finger of 12.5 mm and larger.	Protection against foreign bodies with a diameter of 12.5 mm and larger.
3	Protection against contact with tools and wires larger than 2.5 mm	Protection against foreign bodies with a diameter of 2.5 mm and larger.
4	Protection against contact with tools and wires larger than 1 mm	Protection against foreign bodies with a diameter of 1 mm and larger.
5	Complete protection against accidental contact	Protection against dust: Penetration of dust is not fully prevented, but dust must not penetrate to such an extent that the equipment's functionality or safety is restricted in any way
6	Complete protection against accidental contact	Dustproof: No penetration of dust possible with a negative pressure of 20 mbar.

Definition of the IP degrees of protection

Table 2: Water protection

2nd	Protection against ingress of water
0	No protection
1	Protection against dripping water: Dripping water falling vertically must not have a damaging effect
2	Protection against dripping water up to a tilt of 15°: Dripping water falling vertically must not have a damaging effect, if the equipment is tilted by up to 15°.
3	Protection against spraying water: Water that is sprayed in an angle of up to 60° must not have any damaging effect
4	Protection against splashing water: Water spraying from all directions towards the equipment must not have any damaging effect
5	Protection from jets of water: Jets of water directed towards the equipment from all directions must not have any damaging effect
6	Protection from powerful jets of water: Powerful jets of water that are directed towards the housing from all directions must not have any damaging effect.
7	Protection from temporary immersion in water: Water must not ingress in a quantity that has a damaging effect, if the housing is temporarily immersed in water under standardized pressure and time conditions
8	Protection from continuous immersion in water: Water must not ingress in a quantity that has a damaging effect, if the housing is continuously immersed in water under conditions agreed upon between the manufacturer and the user. The conditions must however be more severe than for key figure 7.
9	Protected against ingress of water from all directions, even with highly increased pressure against the housing. (High-pressure/steam jet cleaner, 80–100 bar)

Definition of the IP degrees of protection

Degrees of protection against water, designated by the second index number

The second index number defines the level of protection provided by the housing against damaging influences on the equipment resulting from the intrusion of water.

Table 3 gives short descriptions and definitions for the degrees of protection defined by the second index number.

Degrees of protection listed in this table may only be determined using the second index number and not through reference to the brief description or definition.

Up to the second index number 6, the description means that the requirements for all lower index numbers are also fulfilled.

A housing designated with just the second index number 7 or 8 is considered unsuitable for exposure to jet-spray water (designated with the second index number 5 or 6) and does not need to meet the requirements of index numbers 5 or 6, unless equipped with a double designation according to the following table:

Table 3: Degrees of protection

The housing meets the test for			
jet-spray water, second index number	Temporary/permanent submersion second index number	Description and label	Area of application
5	7	IPX5 / IPX7	Multipurpose
6	7	IPX6 / IPX7	Multipurpose
5	8	IPX5 / IPX8	Multipurpose
6	8	IPX6 / IPX8	Multipurpose
	7	IPX7	Restricted
	8	IPX8	Restricted

Housings for **"multipurpose"** use, as specified in the last column, must meet the requirements, both when exposed to jet-spray water or when temporarily or permanently submerged.

Housings for **"restricted"** use, as specified in the last column, are considered suitable only for temporary or permanent submersion and unsuitable for exposure to jet-spray water.

Current carrying capacity - Derating behavior of *revos* industrial multipole connectors

Like any other connector, the ***revos*** industrial multipole connector also faces a reduction in the values for the current carrying capacity when the ambient temperature rises.

This behavior is called derating behavior. Basic information on the derating behavior of connectors is provided in standard DIN EN 60 512-5-2-2003.

Each contact insert is characterized by its rated current, among other things. The rated current is the current that a connector can carry in an ambient temperature of 40°C, simultaneously continued (not intermittent) over all contacts without exceeding the permissible upper temperature limit.

The derating curve shows the maximum current I at the given ambient temperature without the connector exceeding the upper temperature limit.

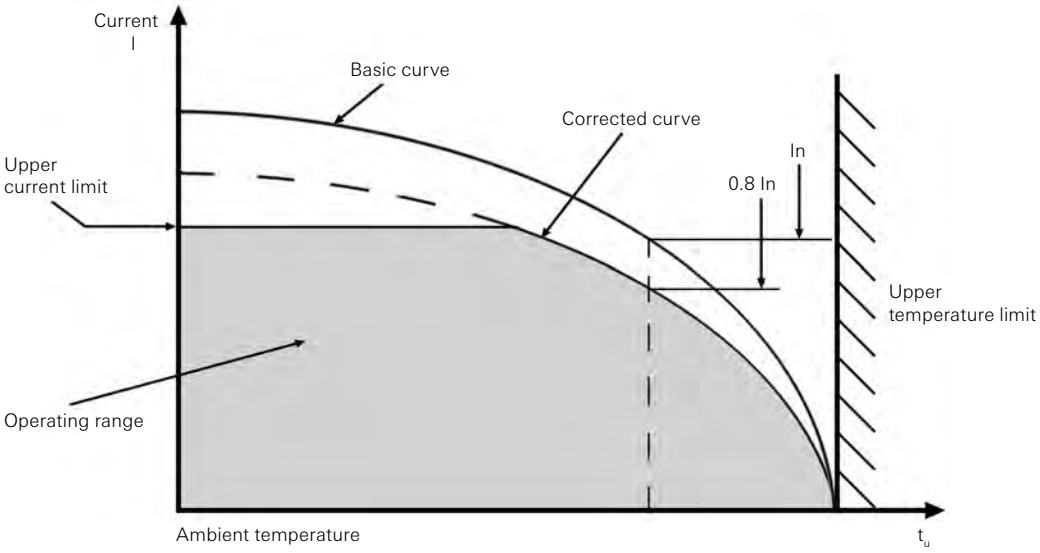

Curve of current carrying capacity derived from the basic curve Source DIN EN 60 512-5-2-2003

Current carrying capacity

The current carrying capacity for plug connectors is determined and established based on DIN EN 61 984/ VDE 0627: 2009 and DIN EN 175 301-801: 2007, if applicable.

During proper use, the contact inserts of the ***revos*** series must not be inserted or removed under load or when live.

The contact inserts of the ***revos*** series are type-tested according to UL 1977 and C22.2 NO 182.1 and must not be inserted or removed when under load.

The rated current is the maximum operating current. The temperature resistance of the used connection cable must be suitable for the intended purpose. (IEC 60 364-5-52 / DIN VDE 0298-4)

Remark on double PE connection:

The PE connection always has to be designed equally on both sides to ensure the consistency of the PE connection. A certified electrician must ensure PE consistency, if connectors with two electrically insulated PE connections are used.
The protection function must be ensured by suitable measures if used in plastic housings or during maintenance work on the connectors outside the metal housing.

Information on how to change over from PG to metric threads

Basic legal conditions

The European standard EN 50 262 “Metric Cable Glands for Electrical Installation” was ratified on April 01, 1989 by CENELEC (European Committee for Electrotechnical Standardization) and put into force.

The big difference in the new EN standard is it has the character of a safety standard.
As a building standard it only defines the metric thread and its lead.

PG threads are available on request!

Selection criteria and characteristics of the different contact platings tin, silver and gold

Contact platings

The core of an electric plug connection is the contact pair, consisting of the socket and plug contacts. Contacts are produced almost exclusively from copper alloys, and Wieland Electric GmbH uses contact platings made of tin, silver and gold, depending on the product specification:

Tin is corrosion-resistant; silver offers favorable conditions at high current and with cyclical switching processes; gold offers protection against aggressive environmental conditions.

Tin-plated

Silver-plated

Gold-plated

- ***revos*** – 16 A plug connector in screw and crimp design are available in all three surface platings, tin, silver and gold.
- ***revos*** – 16 A plug connectors with spring clamp contacts are available with silver-plating
- ***revos*** – 16 A multipole adapters are normally available tin-plated.
- ***revos*** – hybrid plug connectors are normally supplied in a tin version for I ≤ 16 A in and in a silver-plated version for I > 16 A.

Wieland Hotline · Advice

We are there for you

Phone +49 951 9324 991
Fax +49 951 9326 991
AT.TS@wieland-electric.com

Inserts with tin-plated contacts:

Offers excellent resistance to the corrosive gases SO_2 and H_2S. Tin-plated contacts are especially well suited for transmitting low voltages and current in the millivolt and µA range, but also for typical signal voltages, such as 24 V and lower ampere, or network voltage and corresponding current.

Inserts connectors with silver-plated contacts:

Silver-plated contacts extend the operating life of the plug connector when there is strong current, in particular with cyclical motor start-up current that is markedly above the nominal current of the plug connectors. For example, in use on plastic injection molding machines that switch current on and off within seconds. Silver-plated contacts have proven themselves when the maximum current load capacity limit of 16 A was almost surpassed. Here, too, longer life cycles can be achieved.

In the range of high contact temperatures (> 100 °C), silver-plated contacts are preferable to tin-plated contacts.

Aging of silver contacts due to the influence of industrial atmospheres.

During the lifetime of the silver contacts, a silver sulfide layer can form due to the increased affinity of silver for sulfur, which is present in industrial atmospheres in small amounts.

Through the chemical reaction of the silver with the gaseous sulfur in the surrounding air, brown to black layers arise, which result in coloring of the surface.

The chemical reaction of the silver surfaces on the plug systems of Wieland Electric GmbH can be delayed by passivating the silver-plated surfaces at the factory with an additional layer. This passivation protects the silver temporarily from a reaction with the gaseous sulfur in the surrounding air. Every currently known passivation layer will protect the silver surface for a limited time only, and a silver sulfide layer, including a black-brown coloration, will form.

This soft layer is extremely thin and is broken through when the contacts are mated. As a result, low transmission resistance is assured, even for colored contacts. This has been proven in numerous examinations in our laboratory.

Inserts connectors with gold-plated contacts:

In areas where high signal precision is required and the signals are transmitted through extremely small current and low voltage, signal distortions can occur with silver contacts with a silver sulfide layer. To simplify, the following values can be used: For current < 5 mA and voltages up to 5 V, tin-plated or gold-plated contacts are recommended.

But for extreme applications, only gold-plated contacts should be used.

Conclusion:

Fundamentally, tin-plated contacts are very good or better suited than silver-plated contacts for all types of signal current. For stronger current, when used with high ambient temperatures or a cyclical electric current, longer service lives can be expected with silver-plated contacts. Gold-plated contacts should be used in the range of very low voltage and current.

Wieland has decades of experience in the area of pluggable connection technology. We offer the best-possible contact with the optimal plating for every application.

Explanations of applications in hazardous areas

revos Ⓔx-multipole connectors are designed for special applications in hazardous areas. Their use in zone 0 for intrinsic circuits has been approved by the DEKRA EXAM test institute. The housings for the multipole connectors are manufactured from die cast zinc alloy.

Operating instructions for the connector series „revos Ex…“

A pluggable connection consists of a hood, a base as well as a female and male insert.

Installation of a pluggable connection must be prepared as follows:

– Closed bottom housings must be fixed with screws to a flat surface using the available bore holes.
– Open-bottom housings must be fixed with screws to a flat surface using the available bore holes. Before fixing the housing to the surface, ensure that the seal fixed to the base at the time of delivery is mounted correctly.
– The female insert and male insert must be screwed into the hood (or alternatively screwed into the base) using the screws already attached to the frame of the male or female connector.
– The cables are connected to the male connectors and female connectors using the screw connection with a torque of 0.5 Nm.

The components are made ready for operation by plugging the hood and base together and latching them.

The relevant connectors must be mounted to device in a way that at least protection degree IP 54 according to EN 60529 is ensured.

The „revos Ex“ connectors are designed for use in an ambient temperature range at installation site of –20°C bis +60°C.

Usage note:
The “revos Ex” plug connector series can be used with a rated voltage of 90 V and a permissible cable cross-section of 0.5 mm2 to 2.5 mm^2 for the following application areas according to ATEX directive 94/9/EC and the EN 60079-0:2006, EN 60079-11:2007 and EN 50303:2000 standards:

Ⓔx I M1 Ex ia I

Proof is provided by the marking of the Ex area on the individual components of the connector.

Permissible conductor cross section: 1.5 mm^2 to	2.5 mm^2	to	16 A
	1.0 mm^2	to	10 A
	0.75 mm^2	to	6 A
	0.5 mm^2	to	3 A

Wieland Electric GmbH
Brennerstraße 10-14
D-96052 Bamberg
Germany

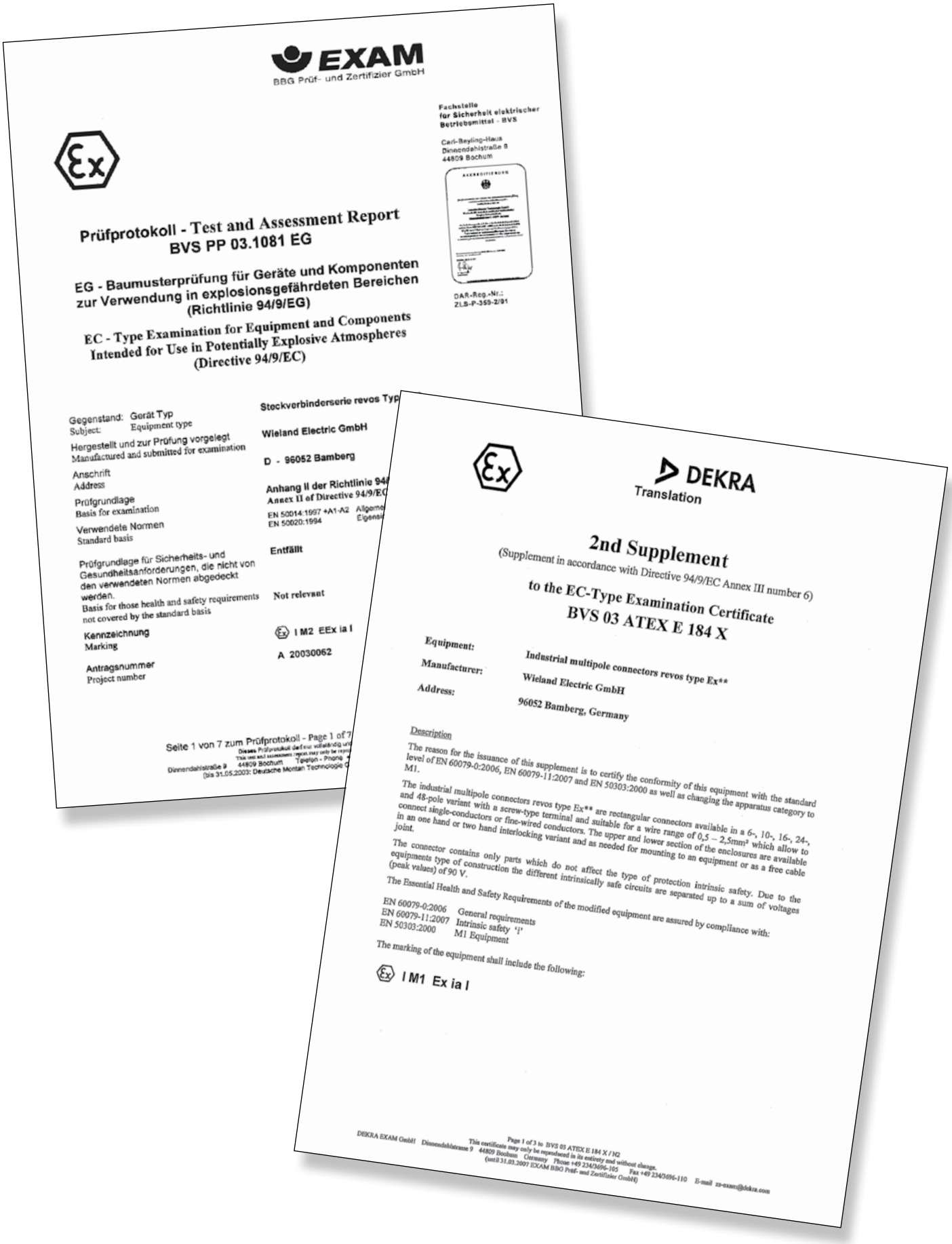

EXAM
BBG Prüf- und Zertifizier GmbH

Fachstelle
für Sicherheit elektrischer
Betriebsmittel - BVS

Carl-Beyling-Haus
Dinnendahlstraße 9
44809 Bochum

DAR-Reg.-Nr.:
ZLS-P-359-2/91

Prüfprotokoll - Test and Assessment Report
BVS PP 03.1081 EG

EG - Baumusterprüfung für Geräte und Komponenten zur Verwendung in explosionsgefährdeten Bereichen (Richtlinie 94/9/EG)

EC - Type Examination for Equipment and Components Intended for Use in Potentially Explosive Atmospheres (Directive 94/9/EC)

Gegenstand: Gerät Typ Subject: Equipment type	Steckverbinderserie revos Typ
Hergestellt und zur Prüfung vorgelegt Manufactured and submitted for examination	Wieland Electric GmbH
Anschrift Address	D - 96052 Bamberg
Prüfgrundlage Basis for examination	Anhang II der Richtlinie 94/ Annex II of Directive 94/9/EC
Verwendete Normen Standard basis	EN 50014:1997 +A1-A2 Allgeme EN 50020:1994 Eigensi
Prüfgrundlage für Sicherheits- und Gesundheitsanforderungen, die nicht von den verwendeten Normen abgedeckt werden. Basis for those health and safety requirements not covered by the standard basis	Entfällt Not relevant
Kennzeichnung Marking	Ex I M2 EEx ia I
Antragsnummer Project number	A 20030062

Seite 1 von 7 zum Prüfprotokoll - Page 1 of 7

DEKRA
Translation

2nd Supplement

(Supplement in accordance with Directive 94/9/EC Annex III number 6)

to the EC-Type Examination Certificate
BVS 03 ATEX E 184 X

Equipment:	**Industrial multipole connectors revos type Ex****
Manufacturer:	**Wieland Electric GmbH**
Address:	**96052 Bamberg, Germany**

Description

The reason for the issuance of this supplement is to certify the conformity of this equipment with the standard level of EN 60079-0:2006, EN 60079-11:2007 and EN 50303:2000 as well as changing the apparatus category to M1.

The industrial multipole connectors revos type Ex** are rectangular connectors available in a 6-, 10-, 16-, 24-, and 48-pole variant with a screw-type terminal and suitable for a wire range of 0,5 – 2,5mm² which allow to connect single-conductors or fine-wired conductors. The upper and lower section of the enclosures are available in an one hand or two hand interlocking variant and as needed for mounting to an equipment or as a free cable joint.

The connector contains only parts which do not affect the type of protection intrinsic safety. Due to the equipments type of construction the different intrinsically safe circuits are separated up to a sum of voltages (peak values) of 90 V.

The Essential Health and Safety Requirements of the modified equipment are assured by compliance with:

EN 60079-0:2006	General requirements
EN 60079-11:2007	Intrinsic safety 'i'
EN 50303:2000	M1 Equipment

The marking of the equipment shall include the following:

Ex I M1 Ex ia I

DEKRA EXAM GmbH Dinnendahlstrasse 9 44809 Bochum Germany Phone +49 234/3696-105 Fax +49 234/3696-110 E-mail zs-exam@dekra.com

Page 1 of 3 to BVS 03 ATEX E 184 X / N2
This certificate may only be reproduced in its entirety and without change.
(until 31.03.2007 EXAM BBG Prüf- und Zertifizier GmbH)

revos BASIC single locking lever
Installation spacing and mounting dimensions

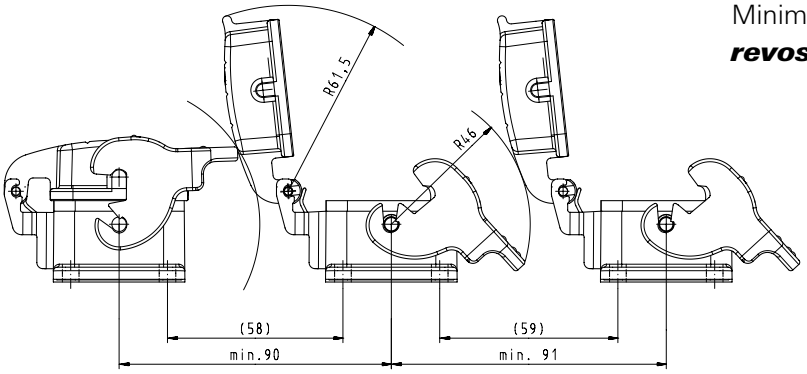

Minimum installation spacing for ***revos*** BASIC open-bottom bases

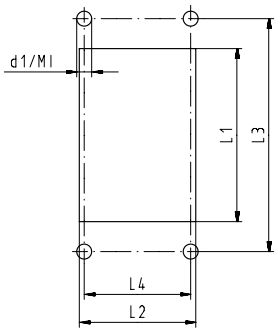

Mounting diagram for ***revos*** BASIC open-bottom bases of size 6 to 48

Size		6	10	16	24	48
Cut-out	L1	52	65	85.5	112	117
	L2	35	35	35	35	81
Installation spacing	L3	70	83	103	130	148
	L4	32	32	32	32	70
	d1	4.3	4.3	4.3	4.3	6.4
	M	M4	M4	M4	M4	M6

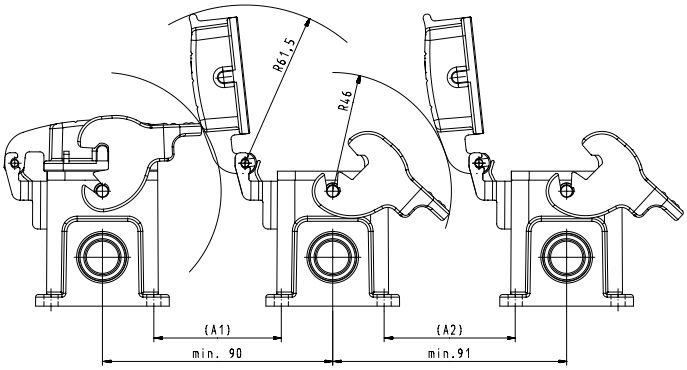

Minimum installation spacing for ***revos*** BASIC closed-bottom bases of size 6 to 24

Size		6	10	16	24
Installation spacing	A1	50	50	45	45
	A2	51	51	46	46

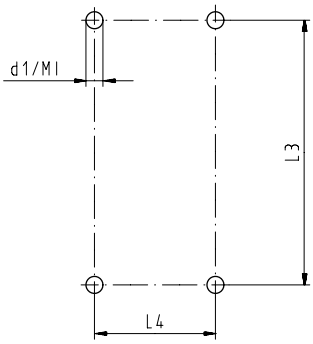

Mounting diagram for ***revos*** BASIC closed-bottom bases of size 6 to 48

Size		6	6H	10	10H	16	24	48
Installation spacing	L3	70	70	82	82	105	132	111
	L4	40	45	40	45	45	45	106
	d1	5.3	5.5	5.3	5.5	5.3	5.3	6.5
	M	M5	M5	M5	M5	M5	M5	M6

revos BASIC double locking lever
Installation spacing and mounting dimensions

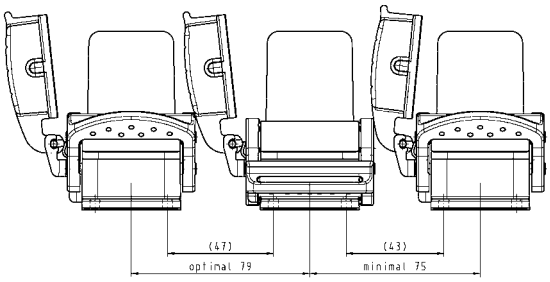

Minimum installation spacing for ***revos*** BASIC open-bottom bases of size 10 to 24

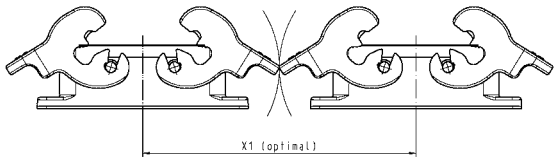

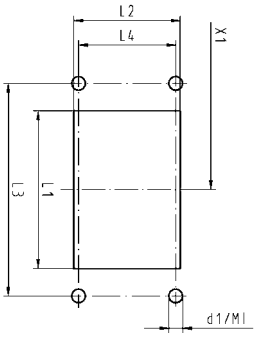

Mounting diagram for ***revos*** BASIC open-bottom bases of size 10 to 32

Size		10	16	24	32
Cut-out	L1	65	85.5	112	86
	L2	35	35	35	71
Installation spacing	L3	83	103	130	110
	L4	32	32	32	65
Minimum Montageabstand	X1	121	139	166	
	d1	4.3	4.3	4.3	5.5
	M1	M4	M4	M4	M5

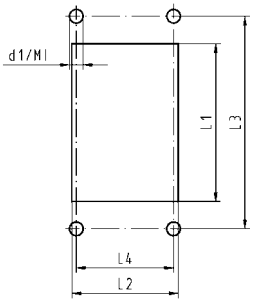

Mounting diagram for ***revos*** BASIC open-bottom bases of size 10 to 24

Size		10	10H	16	24
Installation spacing	L3	82	82	105	132
	L4	40	45	45	45
	d1	5.5	5.5	5.5	5.5
	M1	M5	M5	M5	M5

EMC housings, cut-out and mounting dimensions

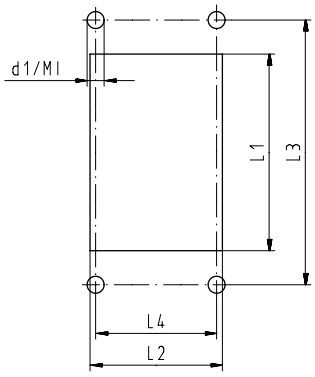

Mounting diagram for ***revos*** EMC open-bottom bases of size 6 to 24

Size		6	10	16	24
Cut-out	L1	52	65	85.5	112
	L2	35	35	35	35
Installation spacing	L3	70	83	103	130
	L4	32	32	32	32
	d1	4.3	4.3	4.3	4.3
	M1	M4	M4	M4	M4

revos HD
Housing line, cut-outs and mounting dimensions

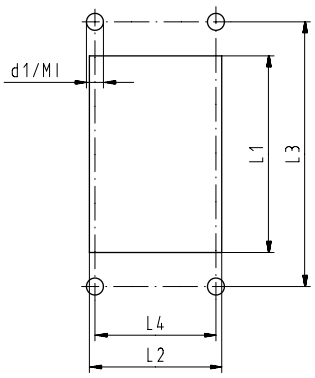

Mounting diagram for ***revos*** HD open-bottom bases of size 10/15, 16/25 and 32/50

Size		10/15	16/25	32/50
Cut-out	L1	56	72	82
	L2	23	23	49
Installation spacing	L3	70	86	92
	L4	17.5	17.5	42
	d1	3.3	3.3	4.3
	M1	M3	M3	M4

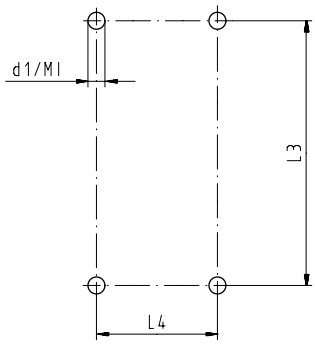

Mounting diagram for ***revos*** HD closed-bottom bases of size 10/15, 16/25 and 32/50

Size		10/15	16/25	32/50
Installation spacing	L3	48	64	94
	L4	40	40	46
	d1	4.3	4.3	4.3
	M1	M4	M4	M4

revos FLEX COMPACT **1M**
Cut-out dimensions

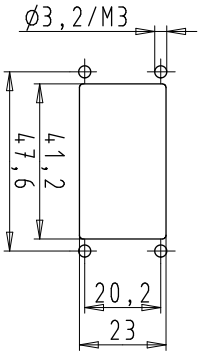

Cut-out for ***revos*** FLEX COMPACT 1M

Installation example for *revos* Ex
Multipole hoods for cable-to-cable couplings

Size	Thread	Hood Pos. 1	Hood Pos. 2	Hood Pos. 3	Bottom-base Pos. 4	Bottom-base Pos. 5	Hood Pos. 6
6	M20	99.741.3329.7	70.352.0636.4 *	70.350.0636.4 *	99.700.3329.7	70.320.0628.9	99.731.3329.7
	M25	99.742.3329.7	70.354.0636.4 *	70.353.0636.4 *	–	–	99.732.3329.7
10	M20	99.743.3329.7	70.352.1036.4 *	70.350.1036.4 *	99.706.3329.7	70.320.1028.9	99.733.3329.7
	M25	99.744.3329.7	70.354.1036.4 *	70.353.1036.4 *	–	–	99.734.3329.7
16	M25	99.745.3329.7	70.352.1636.4 *	70.350.1636.4 *	99.702.3329.7	70.320.1628.9	99.735.3329.7
	M32	99.746.3329.7	70.354.1636.4 *	70.353.1636.4 *	–	–	99.736.3329.7
24	M25	99.747.3329.7	70.352.2436.4 *	70.350.2436.4 *	99.704.3329.7	70.320.2428.9	99.737.3329.7
	M32	99.748.3329.7	70.354.2436.4 *	70.353.2436.4	–	–	99.738.3329.7
48	M32	70.372.4836.4	70.375.4836.4 *	70.350.4828.4 *	–	70.320.4828.9	–
	M40	70.374.4836.4	70.376.4836.4	70.353.4828.4	–	–	–

Handling instructions for the connectors are available in section on page 298.

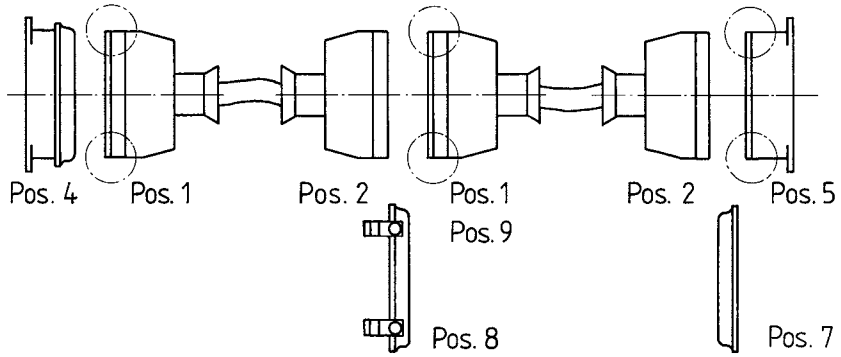

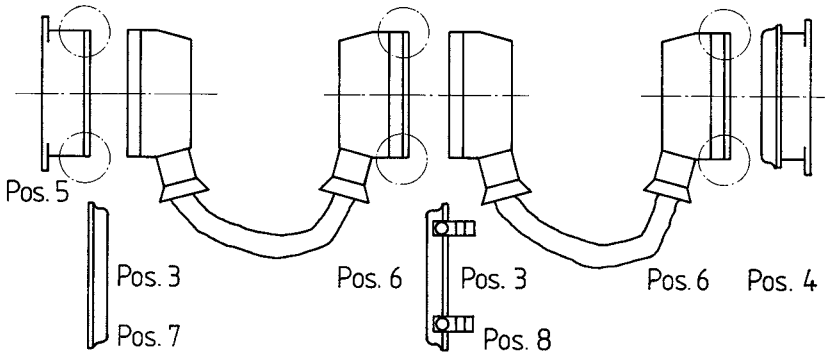

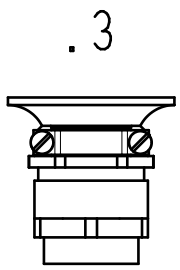

* These hoods are also available in the version 70.3xx.xxxx.3 with a trumpet gland

Crimping tool

Description	Type	Part No.	P.U.
Tool			
Crimping tool in the case		95.101.0800.0	
Crimping die	"A"	05.502.2000.0	1
Crimping die	"B"	05.502.2100.0	1
Crimping die	"C"	05.502.2200.0	1
Crimping die	"D"	05.502.2300.0	1
Crimping die	"E"	05.502.2400.0	1
Crimping die	"F"	05.502.2600.0	1
Crimping die	"G"	05.502.4900.0	1
Crimping die	"H"	05.502.5000.0	1
Contact positioner	1	05.502.3100.0	1
Contact positioner	2	05.502.3200.0	1
Contact positioner	3	05.502.3300.0	1
Contact positioner	4	05.502.3800.0	1
Contact positioner	5	05.502.5100.0	1
Contact positioner	6	05.502.5200.0	1

Crimping die "A"

Crimping die "B"

Crimping die "C"

Crimping die "D"

Crimping die "E"

Crimping die "F"

Crimping die "g"

Crimping die "h"

Contact positioner 1

Contact positioner 2

Contact positioner 3

Contact positioner 4

Contact positioner 5

Contact positioner 6

Assignment of contacts to appropriate crimping tool

Part No.			Wire range						Suitable for															
Female	Male	Contact diameter	mm²	AWG	Surface	Stripping length mm	Crimping die	Contact positioner	revos BASIC	revos MOT	revos MINI (5-pole)	revos MINI (7+8-pole)	revos MINI (12-pole)	revos HD	revos FLEX (Modul 3-pole)	revos FLEX (Modul 4-pole)	revos FLEX (Modul 5-pole)	revos FLEX (Modul 5-pole)	revos FLEX High-voltage-module	revos FLEX (Modul 10-pole)	revos FLEX RJ45	revos DD	revos FLEX (Modul 20-pole)	revos BASIC switching contact	revos SLIDE	Extraction tool
02.123.7001.0	05.543.7001.0	2.5	0.5	20	Au0,8	7	B	3	●	●	●															05.502.3500.0
02.123.7002.0	05.543.7002.0	2.5	0.5	20	Ag	7	B	3	●	●	●															05.502.3500.0
02.123.7021.0	05.543.7021.0	2.5	0.5	20	Sn	7	B	3	●	●	●															05.502.3500.0
02.123.7101.0	05.543.7101.0	2.5	0.75-1.0	18	Au0,8	7	B	3	●	●	●															05.502.3500.0
02.123.7102.0	05.543.7102.0	2.5	0.75-1.0	18	Ag	7	B	3	●	●	●															05.502.3500.0
02.123.7121.0	05.543.7121.0	2.5	0.75-1.0	18	Sn	7	B	3	●	●	●															05.502.3500.0
02.123.7201.0	05.543.7201.0	2.5	1.5	16	Au0,8	7	B	3	●	●	●															05.502.3500.0
02.123.7202.0	05.543.7202.0	2.5	1.5	16	Ag	7	B	3	●	●	●															05.502.3500.0
02.123.7221.0	05.543.7221.0	2.5	1.5	16	Sn	7	B	3	●	●	●															05.502.3500.0
02.123.7301.0	05.543.7301.0	2.5	2.5	14	Au0,8	7	B	3	●	●	●															05.502.3500.0
02.123.7302.0	05.543.7302.0	2.5	2.5	14	Ag	7	B	3	●	●	●															05.502.3500.0
02.123.7321.0	05.543.7321.0	2.5	2.5	14	Sn	7	B	3	●	●	●															05.502.3500.0
02.123.7401.0	05.543.7401.0	2.5	4	12	Au0,8	7	B	3	●	●	●															05.502.3500.0
02.123.7402.0	05.543.7402.0	2.5	4	12	Ag	7	B	3	●	●	●															05.502.3500.0
02.123.7421.0	05.543.7421.0	2.5	4	12	Sn	7	B	3	●		●															05.502.3500.0
02.124.0900.0	05.544.0900.0	1.58	0.2-0.56	24-20	Sn	4	E	2				●		●												05.502.0000.0
02.124.0929.0	05.544.0929.0	1.58	0.2-0.56	24-20	Sn	4	E	2				●		●												05.502.0000.0
02.124.1000.0	05.544.1000.0	1.58	0.75-1.50	18-16	Sn	4	E	2				●		●												05.502.0000.0
02.124.1029.0	05.544.1029.0	1.58	0.75-1.50	18-16	Sn	4	E	2				●		●												05.502.0000.0
02.124.1400.0	05.544.1400.0	1.58	0.5-1.50	20-16	Au	4	E	2				●		●												05.502.0000.0
02.124.1429.0	05.544.1429.0	1.58	0.5-1.50	20-16	Au	4	E	2				●		●												05.502.0000.0
02.125.2929.8	05.544.1829.8	3.6	1.5	16	Ag	10	B	none							●											05.502.0910.0
02.125.3029.8	05.544.1929.8	3.6	2.5	14	Ag	10	B	none							●											05.502.0910.0
02.125.3129.8	05.544.3129.8	3.6	4	12	Ag	10	D	1							●											05.502.0910.0
02.125.3229.8	05.544.3229.8	3.6	6	10	Ag	10	D	1							●											05.502.0910.0
02.125.3329.8	05.544.3329.8	3.6	10	8	Ag	10	D	1							●											05.502.0910.0
02.125.3429.8	05.544.3429.8	2.5	0.5-1.5	20-16	Ag	4	C	2								●	●									05.502.0610.0
02.125.3529.8	05.544.3529.8	2.5	1.5-2.5	16-14	Ag	4	C	2								●	●									05.502.0610.0
02.125.3629.7	05.544.3629.7	2.5	0.5	20	Au	8	B	1										●	●							05.502.0810.0
02.125.3629.8	05.544.3629.8	2.5	0.5	20	Ag	8	B	1										●	●							05.502.0810.0
02.125.3729.7	05.544.3729.7	2.5	0.75-1.0	18	Au	8	B	1										●	●							05.502.0810.0
02.125.3729.8	05.544.3729.8	2.5	0.75-1.0	18	Ag	8	B	1										●	●							05.502.0810.0
02.125.3829.8	05.544.3829.8	2.5	1.5	16	Ag	8	B	1										●	●							05.502.0810.0
02.125.3929.7	05.544.3929.7	2.5	2.5	14	Au	8	B	1										●	●							05.502.0810.0
02.125.3929.8	05.544.3929.8	2.5	2.5	14	Ag	8	B	1										●	●							05.502.0810.0
02.125.4029.8	05.544.4029.8	2.5	4	12	Ag	8	B	1										●	●							05.502.0810.0
02.125.4129.7	05.544.4129.7	1.6	0.14-0.37	26-22	Au	8	B	1					●							●	●	●				05.502.0710.0
02.125.4129.8	05.544.4129.8	1.6	0.14-0.37	26-22	Ag	8	B	1					●							●	●	●				05.502.0710.0
02.125.4229.7	05.544.4229.7	1.6	0.5	20	Au	8	B	1					●							●	●	●				05.502.0710.0
02.125.4229.8	05.544.4229.8	1.6	0.5	20	Ag	8	B	1					●							●	●	●				05.502.0710.0
02.125.4329.7	05.544.4329.7	1.6	0.75-1.0	18	Au	8	B	1					●							●	●	●				05.502.0710.0
02.125.4329.8	05.544.4329.8	1.6	0.75-1.0	18	Ag	8	B	1					●							●	●	●				05.502.0710.0
02.125.4429.7	05.544.4429.7	1.6	1.5	16	Au	8	B	1					●							●	●	●				05.502.0710.0
02.125.4429.8	05.544.4429.8	1.6	1.5	16	Ag	8	B	1					●							●	●	●				05.502.0710.0
02.125.4529.7	05.544.4529.7	1.6	2.5	14	Au	8	B	1					●							●	●	●				05.502.0710.0
02.125.4529.8	05.544.4529.8	1.6	2.5	14	Ag	8	B	1					●							●	●	●				05.502.0710.0
02.125.4629.7	05.544.4629.7	1.0	0.09-0.25	28-24	Au	3	A	4															●			05.502.0410.0
02.125.4729.7	05.544.4729.7	1.0	0.25-0.5	24-20	Au	3	A	4															●			05.502.0410.0
	05.543.9021.0	2.5	0.5	20	Sn	7	B	3																●		05.502.3500.0
	05.543.9121.0	2.5	0.75-1.0	18	Sn	7	B	3																●		05.502.3500.0
	05.543.9221.0	2.5	1.5	16	Sn	7	B	3																●		05.502.3500.0
	05.543.9321.0	2.5	2.5	14	Sn	7	B	3																●		05.502.3500.0
	05.543.9421.0	2.5	4	12	Sn	7	B	3																●		05.502.3500.0
02.125.1121.0	05.544.5621.0	1.65	1.5	16	Ag	3	B	3																	●	05.502.3500.0
Z7.280.4227.0		1.6			Ag	6	F						●													05.502.0710.0

Detailed table of contents

				Page
Introduction				6–25
revos	**revos** MINI		3 to 12-pole, 50–400 V, 10 A	28–31
Contact inserts	**revos** BASIC	500 V 16 A	6 to 48-pole, 500 V, 16 A, screw connection	32–33
see from			6 to 48-pole, 500 V, 16 A, spring clamp connection	34–35
page 26			6 to 24-pole, 500 V, 16 A, double spring clamp connection	36–37
			6 to 24-pole, 500 V, 16 A, push-in connection	38–39
			6 to 48-pole, 500 V, 16 A, crimp connection	40–41
	revos BASIC EE		10 to 46-pole, 500 V, 16 A, crimp connection	42–43
Multipole	**revos** BASIC		6 to 24-pole, 500 V, 16 A, multipole adapters, screw connection	44–45
adapters			6 to 24-pole, 500 V, 16 A, set of 2 components, single locking lever	46–47
			10 to 24-pole, 500 V, 16 A, set of 2 components, double locking lever	48–49
			6 to 24-pole, 500 V, 16 A, multipole adapters, spring clamp connection	50–51
Contact inserts	**revos** BASIC	400/690 V 16 A	3 to 16-pole, 400/690 V, 16 A, screw connection	52–53
		690 V 16 A	6 to 48-pole, 690 V, 16 A, screw connection	54–55
			6 to 24-pole, 690 V, 16 A, crimp connection	56–57
		830 V 16 A	3 to 10-pole, 830 V, 16 A, spring clamp connection	58–59
	revos DD	250 V 10 A	24 to 108-pole, 250 V, 10 A, crimp connection	60–61
	revos HD	250 V 10 A	10 to 32-pole, 250 V, 10 A, screw connection	62–63
			15 to 64-pole, 250 V, 10 A, crimp connection	64–67
			40 and 64-pole, 250 V multipole adapters, screw connection	68–69
	revos POWER	400 V – 690 V 35 A	6-pole + ground, 400–690 V, 35 A, screw connection	70–71
		400/690 V 82 A	4-pole + ground, 400/690 V, 82 A, screw connection	72
		690 V 4x35 A, 6x16 A	4/6-pole + ground, 690 V, screw connection	73
		400/690 V 40 A + 230/400 V 16 A	6-/6-pole + ground, screw connection	74
		400/690 V 100 A + 400/690 V 40 A + 230/400 V 16 A	3-/3-/6-pole + ground, screw connection	75
		690 V 82 A + 400 V 16A	4-/2-pole + ground, 690/400 V, screw connection	76
		400 V 80 A + 400 V 16 A	4-/8-pole + ground, screw connection	77
		690 V 40 A + 250 V 10 A	12-/2-pole + ground, crimp connection	78–79
		690 V 40 A + 160 V 10 A	6-/36-pole + ground, crimp connection	80–81
		230/400 V 16 A + 160 V 10 A	8-/24-pole + ground, crimp connection	82–83
Multipole		400 V and 690 V 35A	6-pole + ground, 400 V/6-pole + ground, 690 V, screw connection	84
adapters		500 V	4-/6-pole + ground, 500 V, screw connection	85
	revos IT		Data cable feed-through	86
Contact inserts	**revos** Ex	90 V 16 A	6 to 48-pole,3–16 A, screw connection	88–89
Modular	**revos** FLEX	100 V to 5,5 kV	3 to 20-polig modular inserts, 250V to 1000V, crimp connection/modular blind piece	90–95
pluggable			Pneumatic-, high-voltage-module	96–97
connector			High-current module	98–100
system			Spring clamp-, USB-, Profibus-, RJ45 module, module frame, accexxories	101–107
Connector	**revos** FLEX COMPACT	Size 1M	Module width 1, module carrier and upper shell, metall	108–109
Connector	**revos** MOT	690 V 16 A	10-pole, 690 V, 16 A plastic connector with contact inserts	110–111
revos housings	**revos** MINI		Hoods and Bases, metal and plastic	114–117
see from	**revos** BASIC	Size 6/6H	Hoods, single locking lever, 6	118–119
page 112			Hoods, single locking lever, 6H	120–121
			Bases, single locking lever, 6	122–123
			Bases, single locking lever, 6H	124–125
		Size 10/10H	Hoods, single locking lever 10, 10H	126–129
			Bases, single locking lever 10, 10H	130–133
			Hood, double locking lever 10, 10H	134–139
			Bases, double locking lever 10, 10H	140–143
		Size 16/16H	Hoods, single locking lever 16, 16 H	144–147
			Bases, single locking lever 16, 16 H	148–151
			Hoods, double locking lever 16, 16 H	152–158
			Hoods, double locking lever, 16XL	159
			Bases, double locking lever 16, 16 H	160–163

				Page
	revos BASIC	Size 24/24H	Hoods, single locking lever	164–167
			Bases, single locking lever	168–171
			Hoods, double locking lever	172–178
			Hoods, double locking lever, 24XL	179
			Bases, double locking lever	180–183
		Size 32	Hoods/Bases, double locking lever	184–185
		Size 48	Hoods/Bases, single locking lever	186–189
		Size 6 to 24	EMC hoods/bases, double locking lever	190-191
		Size 10	Motor connector housing, single locking lever	192
	revos BASIC M	Size 6	Hoods/Bases, single locking lever	194–197
		Size 10	Hoods/Bases, single locking lever	198–201
		Size 16	Hoods/Bases, single locking lever	202–205
		Size 24	Hoods/Bases, single locking lever	206–209
	revos HD	Size 10/15	Hoods, Size 10/15, single locking lever	210–211
			Bases, Size 10/15, single locking lever	212–213
		Size 16/25	Hoods, Size 16/25, single locking lever	214–215
			Bases, Size 16/25, single locking lever	216–217
		Size 32/50	Hoods, Size 32/50, double locking lever	218–221
			Bases, Size 32/50, double locking lever	222–223
	revos Ex	Size 6Ex	Hoods, single locking lever	224–225
			Bases, single locking lever	226–227
		Size 10Ex	Hoods, double locking lever	228–229
			Bases, double locking lever	230–231
		Size 16Ex	Hoods, double locking lever	232–233
			Bases, double locking lever	234–235
		Size 24Ex	Hoods, double locking lever	236–237
			Bases, double locking lever	238–239
		Size 48Ex	Hoods, single locking lever	240–241
			Bases, single locking lever	242–243
sets /4 components	***revos*** BASIC	Size 6 to 24 / 500 V	Complete multipole connector sets (housing + contact inserts)	244–245
revos Acessoires see from page 246	***revos***	mounting frame	Mounting frame size 6 to 24 for DIN rail mount	248–249
	revos	cover and reducer plates	Cover and reducer plates for control cabinet installation	250–251
	revos	coding accessories	Coding bolts, coding pins and female coding pieces	252–256
	revos	Docking frame	Docking frame, size 6 to 24	257
	revos	cable glands	Metal and plastic glands IP68	258
			Metal glands IP54	259
			Reduction pieces, expansion pieces and PG/metric adapter	260
			Blind piece	261
	revos BASIC	protective cover	Size 6 to 32 Protective cover with or without locking levers, IP65	262–264
			Size 6 to 24, protective cover, latchable	265
	revos MINI	protective cover	Protective cover with and without gasket, IP65	265
	revos	tools	Crimping tool, insulation stripping tool, Screwdriver and Jumper bar	266
	revos	marking accessories	Marking accessories and marking tag carriers	267–269
facts&DATA see from page 270			Conductor connections	272–273
			Tightening torque	274
			Definition of the IP degrees of protection	275–277
			Current load capacity - Derating behavior	278–279
			Information on how to change over from PG to metric threads	279
			Selection criteria for the contact surfaces tin, silver and gold	280–281
			Explanations of applications in hazardous areas	282–283
			Installation spacing and mounting dimensions	284–286
			revos Ex Installation example	287
			Crimping tool, Assignment of contacts to appropriate crimping tool	288-289

Index

Part number | page

02.123.70xx.0	30
02.123.70xx.0	40
02.123.70xx.0	42
02.123.70xx.0	56
02.123.70xx.0	111
02.123.71xx.0	30
02.123.71xx.0	40
02.123.71xx.0	42
02.123.71xx.0	56
02.123.71xx.0	111
02.123.72xx.0	30
02.123.72xx.0	40
02.123.72xx.0	42
02.123.72xx.0	56
02.123.72xx.0	111
02.123.73xx.0	30
02.123.73xx.0	40
02.123.73xx.0	42
02.123.73xx.0	56
02.123.73xx.0	111
02.123.74xx.0	30
02.123.74xx.0	40
02.123.74xx.0	42
02.123.74xx.0	56
02.123.74xx.0	111
02.124.0900.0	29
02.124.0900.0	64
02.124.0900.0	66
02.124.0929.0	29
02.124.0929.0	64
02.124.0929.0	66
02.124.1000.0	29
02.124.1000.0	64
02.124.1000.0	66
02.124.1029.0	29
02.124.1029.0	64
02.124.1029.0	66
02.124.1400.0	29
02.124.1400.0	64
02.124.1400.0	66
02.124.1429.0	29
02.124.1429.0	64
02.124.1429.0	66
02.125.2421.0	31
02.125.2421.0	93
02.125.2421.0	103
02.125.2929.8	90
02.125.3029.8	90
02.125.3129.8	90
02.125.3229.8	90
02.125.3329.8	90
02.125.3429.8	91
02.125.3529.8	91
02.125.3629.8	92
02.125.3629.8	97
02.125.3729.8	92
02.125.3729.8	97
02.125.3829.8	92
02.125.3829.8	97
02.125.3929.8	92
02.125.3929.8	97
02.125.4029.8	92
02.125.4029.8	97
02.125.4129.8	93
02.125.4129.8	103
02.125.4129.x	31
02.125.4129.x	60
02.125.4229.8	93
02.125.4229.8	103
02.125.4229.x	31
02.125.4229.x	60
02.125.4329.8	93
02.125.4329.8	103
02.125.4329.x	31
02.125.4329.x	60
02.125.4429.8	93
02.125.4429.8	103
02.125.4429.x	31
02.125.4429.x	60
02.125.4529.8	93
02.125.4529.8	103
02.125.4529.x	31
02.125.4529.x	60
02.125.4629.7	94
02.125.4729.7	94
02.126.5400.8	80
02.126.5400.8	82
02.126.5500.8	80
02.126.5500.8	82
02.126.5600.8	80
02.126.5600.8	82
02.126.5700.8	80
02.126.5700.8	82
02.126.5800.8	80
02.126.5800.8	82
02.126.6100.8	82
02.126.6200.8	82
02.126.6300.8	82
02.126.6400.8	82
02.126.6500.8	82
02.126.6600.8	82
02.126.6700.8	80
02.126.6800.8	80
02.126.6900.8	80
02.126.7000.8	80
02.126.7421.8	100
02.126.7521.8	100
02.126.7621.8	100
02.126.9721.8	99
04.241.1150.0	268
04.242.0850.0	267
04.242.0850.0	267
04.242.1553.0	267
04.242.1553.0	267
04.242.2853.0	267
04.242.6753.0	267
04.242.6753.0	267
04.841.1150.0	268
04.841.1250.0	268
04.841.1350.0	268
04.841.1450.0	268
04.841.1550.0	268
04.841.1650.0	268
04.841.1750.0	268
04.841.1850.0	268
04.841.1950.0	268
04.841.2050.0	268
04.841.2150.0	268
04.841.2250.0	268
04.841.2350.0	268
04.841.2450.0	268
04.841.2550.0	268
04.841.2650.0	268
04.841.2750.0	268
04.841.2850.0	268
04.841.2950.0	268
04.841.3050.0	268
04.841.3150.0	268
04.841.3250.0	268
04.841.3350.0	268
04.841.3450.0	268
04.841.3550.0	268
04.841.3650.0	268
04.841.3750.0	268
04.841.3850.0	268
04.841.3950.0	268
04.841.4050.0	268
04.841.4150.0	268
04.841.4250.0	268
04.841.4350.0	268
04.841.4450.0	268
04.841.4550.0	268
04.841.4650.0	268
04.841.4750.0	268
04.841.4850.0	269
04.841.4950.0	269
04.841.5050.0	269
04.841.5150.0	269
04.841.5250.0	269
04.841.5350.0	269
04.841.5450.0	269
04.841.5550.0	269
04.841.5650.0	269
04.841.5750.0	269
04.841.5850.0	269
04.841.5950.0	269
04.841.6050.0	269
04.841.6150.0	269
04.841.6250.0	269
04.841.6350.0	269
04.841.6450.0	269
04.841.6550.0	269
04.841.6650.0	269
04.841.6750.0	269
04.841.6850.0	269
04.841.6950.0	269
04.841.7050.0	269
04.841.7150.0	269
04.841.7250.0	269
04.841.7350.0	269

04.841.7450.0	269
04.841.7550.0	269
04.841.7650.0	269
04.841.7750.0	269
04.841.9050.0	269
04.841.9150.0	269
05.502.0000.0	29
05.502.0000.0	64
05.502.0000.0	66
05.502.0000.0	266
05.502.0410.0	94
05.502.0610.0	91
05.502.0710.0	31
05.502.0710.0	60
05.502.0710.0	78
05.502.0710.0	80
05.502.0710.0	82
05.502.0710.0	93
05.502.0710.0	103
05.502.0710.0	104
05.502.0810.0	92
05.502.0810.0	97
05.502.0910.0	90
05.502.0910.0	99
05.502.1010.0	90
05.502.1010.0	91
05.502.1010.0	92
05.502.1010.0	93
05.502.1010.0	94
05.502.1010.0	97
05.502.1010.0	103
05.502.2000.0	94
05.502.2100.0	30
05.502.2100.0	31
05.502.2100.0	40
05.502.2100.0	42
05.502.2100.0	56
05.502.2100.0	60
05.502.2100.0	90
05.502.2100.0	92
05.502.2100.0	93
05.502.2100.0	97
05.502.2100.0	103
05.502.2100.0	104
05.502.2100.0	111
05.502.2200.0	91
05.502.2300.0	90
05.502.2400.0	29
05.502.2400.0	64
05.502.2400.0	66
05.502.2800.0	77
05.502.2800.0	99
05.502.2800.0	100
05.502.2900.0	77
05.502.2900.0	99
05.502.2900.0	100
05.502.3100.0	31
05.502.3100.0	60
05.502.3100.0	90
05.502.3100.0	92
05.502.3100.0	93
05.502.3100.0	97
05.502.3100.0	103
05.502.3100.0	104
05.502.3200.0	29
05.502.3200.0	64
05.502.3200.0	66
05.502.3200.0	91
05.502.3300.0	30
05.502.3300.0	40
05.502.3300.0	42
05.502.3300.0	56
05.502.3300.0	111
05.502.3500.0	30
05.502.3500.0	40
05.502.3500.0	42
05.502.3500.0	56
05.502.3500.0	111
05.502.3500.0	266
05.502.3800.0	94
05.502.4400.0	78
05.502.4400.0	80
05.502.4400.0	266
05.502.4500.0	266
05.502.4600.0	100
05.502.4700.0	100
05.502.4800.0	100
05.502.4900.0	78
05.502.4900.0	80
05.502.4900.0	82
05.502.5000.0	78
05.502.5000.0	80
05.502.5000.0	82
05.502.5100.0	78
05.502.5100.0	80
05.502.5100.0	82
05.502.5200.0	78
05.502.5200.0	80
05.502.5200.0	82
05.502.5300.0	99
05.507.4021.0	261
05.507.4053.0	261
05.507.4121.0	261
05.507.4153.0	261
05.507.4221.0	261
05.507.4253.0	261
05.507.4353.0	261
05.507.7621.0	260
05.507.7721.0	260
05.507.7821.0	260
05.507.8121.0	260
05.507.8221.0	260
05.507.8321.0	260
05.507.8421.0	260
05.507.8621.0	260
05.507.8721.0	260
05.507.8821.0	260
05.507.8921.0	260
05.507.9021.0	260
05.507.9121.0	260
05.507.9221.0	260
05.513.4212.0	253
05.543.70xx.0	30
05.543.70xx.0	40
05.543.70xx.0	42
05.543.70xx.0	56
05.543.70xx.0	111
05.543.71xx.0	30
05.543.71xx.0	40
05.543.71xx.0	42
05.543.71xx.0	56
05.543.71xx.0	111
05.543.72xx.0	30
05.543.72xx.0	40
05.543.72xx.0	42
05.543.72xx.0	56
05.543.72xx.0	111
05.543.73xx.0	30
05.543.73xx.0	40
05.543.73xx.0	42
05.543.73xx.0	56
05.543.73xx.0	111
05.543.74xx.0	30
05.543.74xx.0	40
05.543.74xx.0	42
05.543.74xx.0	56
05.543.74xx.0	111
05.543.9021.0	56
05.543.9121.0	56
05.543.9221.0	56
05.543.9321.0	56
05.543.9421.0	56
05.544.0900.0	29
05.544.0900.0	64
05.544.0900.0	66
05.544.0929.0	29
05.544.0929.0	64
05.544.0929.0	66
05.544.1000.0	29
05.544.1000.0	64
05.544.1000.0	66
05.544.1029.0	29
05.544.1029.0	64
05.544.1029.0	66
05.544.1400.0	29
05.544.1400.0	64
05.544.1400.0	66
05.544.1429.0	29
05.544.1429.0	64
05.544.1429.0	66
05.544.1829.8	90
05.544.1929.8	90
05.544.3129.8	90
05.544.3229.8	90
05.544.3329.8	90
05.544.3429.8	91
05.544.3529.8	91
05.544.3629.8	92
05.544.3629.8	97
05.544.3729.8	92
05.544.3729.8	97
05.544.3829.8	92
05.544.3829.8	97
05.544.3929.8	92

Index

Part number | page

05.544.3929.8	97
05.544.4029.8	92
05.544.4029.8	97
05.544.4129.8	93
05.544.4129.8	103
05.544.4129.x	31
05.544.4129.x	60
05.544.4229.8	93
05.544.4229.8	103
05.544.4229.x	31
05.544.4229.x	60
05.544.4329.8	93
05.544.4329.8	103
05.544.4329.x	31
05.544.4329.x	60
05.544.4429.8	93
05.544.4429.8	103
05.544.4429.x	31
05.544.4429.x	60
05.544.4529.8	93
05.544.4529.8	103
05.544.4529.x	31
05.544.4529.x	60
05.544.4629.7	94
05.544.4729.7	94
05.544.8121.0	31
05.544.8121.0	93
05.544.8121.0	103
05.545.7900.8	80
05.545.7900.8	82
05.545.8000.8	80
05.545.8000.8	82
05.545.8100.8	80
05.545.8100.8	82
05.545.8200.8	80
05.545.8200.8	82
05.545.8300.8	80
05.545.8300.8	82
05.545.8600.8	82
05.545.8700.8	82
05.545.8800.8	82
05.545.8900.8	82
05.545.9000.8	82
05.545.9100.8	82
05.545.9200.8	80
05.545.9300.8	80
05.545.9400.8	80
05.545.9500.8	80
05.546.2721.8	100
05.546.2821.8	100
05.546.2921.8	100
05.546.3021.8	99
05.562.3183.0	86
05.562.3283.0	86
05.562.6353.0	94
05.562.6453.0	94
05.567.5214.0	255
05.568.0353.0	31
05.568.0353.0	256
05.576.6612.0	255
05.576.6712.0	255
05.576.6912.0	255
05.576.8312.0	255
05.576.8412.0	255
05.576.8512.0	255
05.592.0621.0	253
06.502.4000.0	34
06.502.4000.0	36
06.502.4000.0	50
06.502.4000.0	58
06.502.4000.0	101
06.502.4000.0	266
06.502.4900.0	82
06.502.5310.0	255
06.502.5410.0	255
06.502.5510.0	253
06.600.6127.6	77
06.600.6127.6	99
06.600.6127.6	100
06.600.6227.6	77
06.600.6227.6	99
06.600.6227.6	100
07.409.7056.0	262
07.409.7156.0	262
07.409.7256.0	262
07.409.7356.0	262
07.416.6353.0	251
07.416.6453.0	251
07.416.6553.0	251
07.416.6853.0	250
07.416.6953.0	250
07.416.7053.0	250
07.416.7153.0	250
07.417.6729.0	114
07.417.6729.0	115
07.417.6729.0	265
07.417.6753.0	114
07.417.6753.0	115
07.417.6753.0	265
07.417.6829.0	114
07.417.6829.0	115
07.417.6829.0	265
07.417.6853.0	114
07.417.6853.0	115
07.417.6853.0	265
07.428.5553.0	262
07.428.5653.0	262
07.428.5753.0	262
70.000.0653.0	84
70.005.0653.0	84
70.010.0653.0	84
70.015.0653.0	84
70.060.1028.0	86
70.060.1628.0	86
70.060.2428.0	86
70.061.2428.0	86
70.100.0653.3	44
70.100.0653.4	44
70.100.1053.3	44
70.100.1053.4	44
70.100.1653.3	44
70.100.1653.4	44
70.100.2453.3	44
70.100.2453.4	44
70.101.0653.0	50
70.101.1053.0	50
70.101.1653.0	50
70.101.2453.0	50
70.105.0653.3	44
70.105.0653.4	44
70.105.1053.3	44
70.105.1053.4	44
70.105.1653.3	44
70.105.1653.4	44
70.105.2453.3	44
70.105.2453.4	44
70.106.0653.0	50
70.106.1053.0	50
70.106.1653.0	50
70.106.2453.0	50
70.110.0653.3	44
70.110.0653.4	44
70.110.1053.3	44
70.110.1053.4	44
70.110.1653.3	44
70.110.1653.4	44
70.110.2453.3	44
70.110.2453.4	44
70.111.0653.0	50
70.111.1053.0	50
70.111.1653.0	50
70.111.2453.0	50
70.115.0653.3	44
70.115.0653.4	44
70.115.1053.3	44
70.115.1053.4	44
70.115.1653.3	44
70.115.1653.4	44
70.115.2453.3	44
70.115.2453.4	44
70.116.0653.0	50
70.116.1053.0	50
70.116.1653.0	50
70.116.2453.0	50
70.200.0653.0	70
70.210.0653.0	70
70.300.0602.0	32
70.300.0640.0	32
70.300.1002.0	32
70.300.1040.0	32
70.300.1602.0	32
70.300.1640.0	32
70.300.2402.0	32
70.300.2440.0	32
70.300.3202.0	32
70.300.3253.0	32
70.300.4840.0	32
70.301.0640.0	32
70.301.1040.0	32
70.301.1640.0	32
70.301.2440.0	32
70.302.0640.0	32
70.302.1040.0	32
70.302.1640.0	32

70.302.2440.0	32
70.310.0602.0	32
70.310.0640.0	32
70.310.1002.0	32
70.310.1040.0	32
70.310.1602.0	32
70.310.1640.0	32
70.310.2402.0	32
70.310.2440.0	32
70.310.3202.0	32
70.310.3253.0	32
70.310.4840.0	32
70.311.0640.0	32
70.311.1040.0	32
70.311.1640.0	32
70.311.2440.0	32
70.312.0640.0	32
70.312.1040.0	32
70.312.1640.0	32
70.312.2440.0	32
70.320.0628.0	122
70.320.0628.9	226
70.320.0638.0	191
70.320.1028.0	86
70.320.1028.0	140
70.320.1028.9	230
70.320.1038.0	191
70.320.1628.0	84
70.320.1628.0	85
70.320.1628.0	86
70.320.1628.0	160
70.320.1628.9	234
70.320.1638.0	191
70.320.2428.0	86
70.320.2428.0	180
70.320.2428.9	238
70.320.2438.0	191
70.320.3228.0	185
70.320.4828.0	188
70.320.4828.9	242
70.325.0628.0	122
70.325.0628.9	226
70.325.1028.0	140
70.325.1028.9	230
70.325.1628.0	84
70.325.1628.0	85
70.325.1628.0	160
70.325.1628.9	234
70.325.2428.0	180
70.325.2428.9	238
70.325.4828.0	188
70.325.4828.9	242
70.330.0635.0	122
70.330.0635.1	122
70.330.0636.0	226
70.330.1035.0	140
70.330.1035.1	140
70.330.1036.0	230
70.330.1635.0	160
70.330.1635.1	160
70.330.2435.0	180
70.330.2435.1	180
70.330.2436.0	238
70.331.0635.0	122
70.331.0635.1	122
70.331.0636.0	226
70.331.1035.0	140
70.331.1035.1	140
70.331.1036.0	230
70.331.1635.0	160
70.331.1635.1	160
70.331.2435.0	180
70.331.2435.1	180
70.331.2436.0	238
70.331.4835.0	188
70.331.4835.1	188
70.331.4835.3	188
70.331.4836.3	242
70.332.0635.0	122
70.332.0635.1	122
70.333.0635.0	122
70.333.0635.1	122
70.333.0636.0	226
70.333.1035.0	140
70.333.1035.1	140
70.333.1036.0	230
70.333.1635.0	160
70.333.1635.1	160
70.333.2435.0	180
70.333.2435.1	180
70.333.2436.0	238
70.334.0635.0	122
70.334.0635.1	122
70.334.0636.0	226
70.334.1035.0	140
70.334.1035.1	140
70.334.1036.0	230
70.335.0635.0	122
70.335.0635.1	122
70.335.0636.0	226
70.335.1035.0	140
70.335.1035.1	140
70.335.1036.0	230
70.336.0635.0	122
70.336.0635.1	122
70.337.0635.0	122
70.337.0635.1	122
70.337.0636.0	226
70.337.1035.0	140
70.337.1035.1	140
70.337.1036.0	230
70.340.0635.0	122
70.340.0635.1	122
70.340.0636.0	226
70.340.1035.0	140
70.340.1035.1	140
70.340.1036.0	230
70.340.1635.0	160
70.340.1635.1	160
70.340.2435.0	180
70.340.2435.1	180
70.340.2436.0	238
70.341.0635.0	122
70.341.0635.1	122
70.341.0636.0	226
70.341.1035.0	140
70.341.1035.1	140
70.341.1036.0	230
70.341.1635.0	160
70.341.1635.1	160
70.341.2435.0	180
70.341.2435.1	180
70.341.2436.0	238
70.341.4835.1	188
70.341.4835.3	188
70.341.4836.3	242
70.342.0635.0	122
70.342.0635.1	122
70.342.0636.0	226
70.342.1035.0	140
70.342.1035.1	140
70.342.1635.0	160
70.342.1635.1	160
70.342.2435.0	180
70.342.2435.1	180
70.343.0635.0	122
70.343.0635.1	122
70.343.0636.0	226
70.343.1035.0	140
70.343.1035.1	140
70.343.1036.0	230
70.343.1635.0	160
70.343.1635.1	160
70.343.2435.0	180
70.343.2435.1	180
70.343.2436.0	238
70.344.0636.0	226
70.344.1035.0	140
70.344.1035.1	140
70.344.1036.0	230
70.344.4835.1	188
70.344.4836.4	242
70.345.0636.0	226
70.345.1036.0	230
70.346.0636.0	226
70.347.0636.0	226
70.347.1036.0	230
70.350.0635.0	118
70.350.0635.1	118
70.350.0636.1	224
70.350.0636.3	224
70.350.0645.1	190
70.350.1035.0	134
70.350.1035.1	134
70.350.1036.1	228
70.350.1036.3	228
70.350.1635.0	152
70.350.1635.1	152
70.350.1636.1	232
70.350.1636.3	232
70.350.2435.0	172
70.350.2435.1	172
70.350.2436.1	236
70.350.2436.3	236

Index

Part number | page

70.350.3235.0	184
70.350.3235.1	184
70.350.4835.0	186
70.350.4835.1	186
70.350.4836.1	240
70.350.4836.3	240
70.352.0635.0	118
70.352.0635.0	118
70.352.0635.1	118
70.352.0635.1	118
70.352.0635.3	118
70.352.0636.1	224
70.352.0636.3	224
70.352.1035.0	134
70.352.1035.0	136
70.352.1035.1	134
70.352.1035.1	136
70.352.1036.1	228
70.352.1036.3	228
70.352.1635.0	152
70.352.1635.0	154
70.352.1635.1	152
70.352.1635.1	154
70.352.1636.1	232
70.352.1636.3	232
70.352.2435.0	172
70.352.2435.1	172
70.352.2436.1	236
70.352.2436.3	236
70.352.3235.0	184
70.352.3235.1	184
70.352.4835.0	186
70.352.4835.1	186
70.352.4836.1	240
70.352.4836.3	240
70.353.0635.0	118
70.353.0635.1	118
70.353.0636.1	224
70.353.0636.3	224
70.353.0645.1	190
70.353.1035.0	134
70.353.1035.1	134
70.353.1036.1	228
70.353.1036.3	228
70.353.1045.1	190
70.353.1635.0	152
70.353.1635.1	152
70.353.1636.1	232
70.353.1636.3	232
70.353.1645.1	190
70.353.2435.0	172
70.353.2435.1	172
70.353.2436.1	236
70.353.2436.3	236
70.353.2445.1	190
70.353.3235.1	184
70.353.4835.1	186
70.353.4836.1	240
70.354.0635.0	118
70.354.0635.1	118
70.354.0636.1	224
70.354.0636.3	224
70.354.1035.0	134
70.354.1035.1	134
70.354.1036.1	228
70.354.1036.3	228
70.354.1635.0	152
70.354.1635.1	152
70.354.1635.2	152
70.354.1635.3	152
70.354.1636.1	232
70.354.1636.3	232
70.354.2435.0	172
70.354.2435.0	174
70.354.2435.1	172
70.354.2435.1	174
70.354.2436.1	236
70.354.2436.3	236
70.354.3235.1	184
70.354.4835.1	186
70.354.4836.1	240
70.355.1035.0	136
70.355.1035.1	136
70.355.1036.1	228
70.355.1036.3	228
70.355.1635.0	154
70.355.1635.1	154
70.355.1636.1	232
70.355.1636.3	232
70.355.2435.0	174
70.355.2435.1	174
70.355.2436.1	236
70.355.2436.3	236
70.357.1035.0	136
70.357.1035.1	136
70.357.1036.1	228
70.357.1036.3	228
70.357.1635.1	154
70.357.1636.1	232
70.357.1636.3	232
70.357.2435.0	174
70.357.2435.1	174
70.357.2436.1	236
70.357.2436.3	236
70.358.1035.0	136
70.358.1035.1	136
70.358.1036.1	228
70.358.1036.3	228
70.358.1635.0	154
70.358.1635.1	154
70.358.1636.1	232
70.358.1636.3	232
70.358.2435.0	174
70.358.2435.1	174
70.358.2436.1	236
70.358.2436.3	236
70.359.1035.0	136
70.359.1035.1	136
70.359.1036.1	228
70.359.1036.3	228
70.359.1635.0	154
70.359.1635.1	154
70.359.1636.1	232
70.359.1636.3	232
70.359.2435.0	174
70.359.2435.1	174
70.359.2436.1	236
70.359.2436.3	236
70.372.0635.0	118
70.372.0635.1	118
70.372.0635.3	118
70.372.1035.0	136
70.372.1035.1	136
70.372.1635.0	154
70.372.1635.1	154
70.374.2435.0	174
70.374.2435.1	174
70.400.0340.0	52
70.400.0640.0	52
70.400.1040.0	52
70.400.1640.0	52
70.405.0653.0	38
70.405.1053.0	38
70.405.1653.0	38
70.405.2453.0	38
70.410.0340.0	52
70.410.0640.0	52
70.410.1040.0	52
70.410.1640.0	52
70.415.0653.0	38
70.415.1053.0	38
70.415.1653.0	38
70.415.2453.0	38
70.420.0637.0	196
70.425.0637.0	196
70.430.0637.1	196
70.431.0637.1	196
70.435.0637.1	196
70.440.0637.1	196
70.441.0637.1	196
70.500.0653.0	34
70.500.1053.0	34
70.500.1653.0	34
70.500.2453.0	34
70.500.3253.0	34
70.500.4853.0	34
70.502.0653.0	36
70.502.1053.0	36
70.502.1653.0	36
70.502.2453.0	36
70.506.0353.0	58
70.506.0653.0	58
70.506.1053.0	58
70.510.0653.0	34
70.510.1053.0	34
70.510.1653.0	34
70.510.2453.0	34
70.510.3253.0	34
70.510.4853.0	34
70.512.0653.0	36
70.512.1053.0	36
70.512.1653.0	36
70.512.2453.0	36
70.516.0353.0	58

70.516.0653.0	58
70.516.1053.0	58
70.700.0658.0	40
70.700.1058.0	40
70.700.1658.0	40
70.700.2458.0	40
70.700.3253.0	40
70.700.4858.0	40
70.710.0658.0	40
70.710.1058.0	40
70.710.1658.0	40
70.710.2458.0	40
70.710.3253.0	40
70.710.4858.0	40
70.800.1056.0	42
70.800.1856.0	42
70.800.3256.0	42
70.800.4656.0	42
70.810.1056.0	42
70.810.1856.0	42
70.810.3256.0	42
70.810.4656.0	42
70.940.0653.3	46
70.940.0653.4	46
70.940.1053.3	48
70.940.1053.4	48
70.940.1653.3	48
70.940.1653.4	48
70.940.2453.3	48
70.940.2453.4	48
70.945.0653.3	46
70.945.0653.4	46
70.945.1053.3	48
70.945.1053.4	48
70.945.1653.3	48
70.945.1653.4	48
70.945.2453.3	48
70.945.2453.4	48
70.950.0653.3	46
70.950.0653.4	46
70.950.1053.3	48
70.950.1053.4	48
70.950.1653.3	48
70.950.1653.4	48
70.950.2453.3	48
70.950.2453.4	48
70.955.0653.3	46
70.955.0653.4	46
70.955.1053.3	48
70.955.1053.4	48
70.955.1653.3	48
70.955.1653.4	48
70.955.2453.3	48
70.955.2453.4	48
71.320.1028.0	130
71.320.1628.0	84
71.320.1628.0	85
71.320.1628.0	148
71.320.2428.0	168
71.321.1028.0	192
71.325.1028.0	130
71.325.1628.0	84
71.325.1628.0	85
71.325.1628.0	148
71.325.2428.0	168
71.330.1035.0	130
71.330.1035.1	130
71.330.1635.0	148
71.330.1635.1	148
71.330.2435.0	168
71.330.2435.1	168
71.331.1035.0	130
71.331.1035.1	130
71.331.1635.0	148
71.331.1635.1	148
71.331.2435.0	168
71.331.2435.1	168
71.333.1035.0	130
71.333.1035.1	130
71.333.1635.0	148
71.333.1635.1	148
71.333.2435.0	168
71.333.2435.1	168
71.335.1035.0	130
71.335.1035.1	130
71.340.1035.0	130
71.340.1035.1	130
71.340.1635.0	148
71.340.1635.1	148
71.340.2435.0	168
71.340.2435.1	168
71.341.1035.0	130
71.341.1035.1	130
71.341.1635.0	148
71.341.1635.1	148
71.341.2435.0	168
71.341.2435.1	168
71.342.1035.0	130
71.342.1035.1	130
71.342.1635.0	148
71.342.1635.1	148
71.342.2435.0	168
71.342.2435.1	168
71.343.1035.0	130
71.343.1035.1	130
71.343.1635.0	148
71.343.1635.1	148
71.343.2435.0	168
71.343.2435.1	168
71.350.1035.0	126
71.350.1035.1	126
71.350.1635.0	144
71.350.1635.1	144
71.350.2435.0	164
71.350.2435.1	164
71.352.1035.0	126
71.352.1035.0	126
71.352.1035.1	126
71.352.1035.1	126
71.352.1635.0	144
71.352.1635.0	144
71.352.1635.1	144
71.352.1635.1	144
71.352.2435.0	164
71.352.2435.0	164
71.352.2435.1	164
71.352.2435.1	164
71.353.1035.0	126
71.353.1035.1	126
71.353.1635.0	144
71.353.1635.1	144
71.353.2435.0	164
71.353.2435.1	164
71.354.1035.0	126
71.354.1035.1	126
71.354.1635.0	144
71.354.1635.1	144
71.354.2435.0	164
71.354.2435.0	164
71.354.2435.1	164
71.372.1035.0	126
71.372.1035.1	126
71.372.1635.0	144
71.372.1635.1	144
71.372.2435.0	164
71.372.2435.1	164
71.374.2435.0	164
71.420.1037.0	200
71.420.2437.0	208
71.425.1037.0	200
71.425.2437.0	208
71.430.1037.1	200
71.430.2437.1	208
71.431.1037.1	200
71.431.2437.1	208
71.440.1037.1	200
71.440.2437.1	208
71.441.1037.1	200
71.441.2437.1	208
71.450.1037.1	198
71.450.2437.1	206
71.452.1037.1	198
71.452.2437.1	206
71.472.1037.1	198
71.472.2437.1	206
71.940.1053.3	46
71.940.1053.4	46
71.940.1653.3	46
71.940.1653.4	46
71.940.2453.3	46
71.940.2453.4	46
71.945.1053.3	46
71.945.1053.4	46
71.945.1653.3	46
71.945.1653.4	46
71.945.2453.3	46
71.945.2453.4	46
71.950.1053.3	46
71.950.1053.4	46
71.950.1653.3	46
71.950.1653.4	46
71.950.2453.3	46
71.950.2453.4	46
71.955.1053.3	46

Index

Part number | page

71.955.1053.4	46
71.955.1653.3	46
71.955.1653.4	46
71.955.2453.3	46
71.955.2453.4	46
72.000.0653.0	84
72.005.0653.0	84
72.010.0653.0	84
72.015.0653.0	84
72.107.1053.0	85
72.117.1053.0	85
72.200.0653.0	71
72.203.1253.0	75
72.205.0653.0	76
72.205.1053.0	73
72.205.1253.0	74
72.206.1253.0	77
72.208.0453.0	72
72.210.0653.0	71
72.213.1253.0	75
72.215.0653.0	76
72.215.1053.0	73
72.215.1253.0	74
72.216.1253.0	77
72.218.0453.0	72
72.250.1635.2	74
72.250.1635.2	159
72.250.2435.2	75
72.250.2435.2	179
72.300.0653.0	54
72.300.0653.9	88
72.300.1053.0	54
72.300.1053.9	88
72.300.1653.0	54
72.300.1653.9	88
72.300.2453.0	54
72.300.2453.9	88
72.300.3253.0	54
72.300.4853.0	54
72.300.4853.9	88
72.301.0653.9	88
72.301.1053.9	88
72.301.1653.9	88
72.301.2453.9	88
72.310.0653.0	54
72.310.0653.9	88
72.310.1053.0	54
72.310.1053.9	88
72.310.1653.0	54
72.310.1653.9	88
72.310.2453.0	54
72.310.2453.9	88
72.310.3253.0	54
72.310.4853.0	54
72.310.4853.9	88
72.311.0653.9	88
72.311.1053.9	88
72.311.1653.9	88
72.311.2453.9	88
72.320.1628.0	74
72.320.2428.0	75
72.700.0658.0	56
72.700.1058.0	56
72.700.1658.0	56
72.700.2458.0	56
72.703.3253.0	82
72.703.4253.0	80
72.710.0658.0	56
72.710.1058.0	56
72.710.1658.0	56
72.710.2458.0	56
72.713.3253.0	82
72.713.4253.0	80
73.100.4053.0	68
73.100.6453.0	68
73.105.4053.0	68
73.105.6453.0	68
73.110.4053.0	68
73.110.6453.0	68
73.115.4053.0	68
73.115.6453.0	68
73.300.0353.0	28
73.300.0453.0	28
73.300.1053.0	62
73.300.1653.0	62
73.300.1653.3	62
73.300.3253.0	62
73.310.0353.0	28
73.310.0453.0	28
73.310.1053.0	62
73.310.1653.0	62
73.310.1653.3	62
73.310.3253.0	62
73.320.3228.0	222
73.325.3228.0	222
73.326.4028.0	68
73.326.6428.0	68
73.327.4028.0	68
73.327.6428.0	68
73.330.0635.0	124
73.330.0635.1	124
73.330.1035.0	142
73.330.1035.1	142
73.330.3235.0	222
73.330.3235.1	222
73.330.4035.0	162
73.330.4035.1	162
73.331.0635.0	124
73.331.0635.1	124
73.331.1035.0	142
73.331.1035.1	142
73.331.3235.0	222
73.331.3235.1	222
73.331.4035.0	162
73.331.4035.1	162
73.333.4035.0	162
73.333.4035.1	162
73.334.0635.0	124
73.334.0635.1	124
73.334.1035.0	142
73.334.1035.1	142
73.334.3235.1	222
73.334.4035.0	162
73.334.4035.1	162
73.334.6435.0	182
73.334.6435.1	182
73.335.0635.0	124
73.335.0635.1	124
73.335.1035.0	142
73.335.1035.1	142
73.335.3235.0	222
73.335.3235.1	222
73.335.4035.0	162
73.335.4035.1	162
73.335.6435.0	182
73.335.6435.1	182
73.337.4035.0	162
73.337.4035.1	162
73.337.6435.0	182
73.337.6435.1	182
73.338.4035.1	162
73.338.6435.1	182
73.339.4035.0	162
73.339.4035.1	162
73.339.6435.1	182
73.340.0635.0	124
73.340.0635.1	124
73.340.1035.0	142
73.340.1035.1	142
73.340.3235.1	222
73.340.4035.0	162
73.340.4035.1	162
73.341.0635.0	124
73.341.0635.1	124
73.341.1035.0	142
73.341.1035.1	142
73.341.4035.0	162
73.341.4035.1	162
73.342.0635.0	124
73.342.0635.1	124
73.342.1035.0	142
73.342.1035.1	142
73.342.3235.0	222
73.342.3235.1	222
73.342.4035.0	162
73.342.4035.1	162
73.343.4035.0	162
73.343.4035.1	162
73.344.0635.0	124
73.344.0635.1	124
73.344.1035.0	142
73.344.1035.1	142
73.344.3235.1	222
73.344.4035.0	162
73.344.4035.1	162
73.344.6435.0	182
73.344.6435.1	182
73.345.0635.0	124
73.345.0635.1	124
73.345.1035.0	142
73.345.1035.1	142
73.345.4035.0	162
73.345.4035.1	162
73.345.6435.0	182

73.345.6435.1	182
73.346.0635.0	124
73.346.0635.1	124
73.346.1035.0	142
73.346.1035.1	142
73.346.3235.1	222
73.346.4035.0	162
73.346.4035.1	162
73.346.6435.0	182
73.346.6435.1	182
73.347.4035.0	162
73.347.4035.1	162
73.347.6435.0	182
73.347.6435.1	182
73.350.0635.0	120
73.350.0635.1	120
73.350.0645.1	190
73.350.1035.0	138
73.350.1035.1	138
73.350.3235.0	218
73.350.3235.1	218
73.352.0635.0	120
73.352.0635.1	120
73.352.1035.0	138
73.352.1035.1	138
73.352.3235.0	218
73.352.3235.1	218
73.353.0635.0	120
73.353.0635.1	120
73.353.0645.1	190
73.353.1035.0	138
73.353.1035.1	138
73.353.1045.1	190
73.353.3235.0	218
73.353.3235.1	218
73.353.4045.1	190
73.354.0635.0	120
73.354.0635.1	120
73.354.1035.0	138
73.354.1035.1	138
73.354.3235.0	218
73.354.3235.1	218
73.355.3235.0	220
73.355.3235.1	220
73.355.4035.0	158
73.355.4035.1	158
73.355.6435.0	178
73.355.6435.1	178
73.357.3235.1	220
73.357.4035.0	158
73.357.4035.1	158
73.357.6435.0	178
73.357.6435.1	178
73.358.3235.0	220
73.358.3235.1	220
73.358.4035.0	158
73.358.4035.1	158
73.358.6435.0	178
73.358.6435.1	178
73.359.3235.1	220
73.359.4035.0	158
73.359.4035.1	158
73.359.6435.0	178
73.359.6435.1	178
73.365.6435.1	178
73.367.6435.0	178
73.372.3235.0	218
73.372.3235.1	218
73.374.3235.0	218
73.374.3235.1	218
73.700.0553.0	30
73.700.0753.0	29
73.700.0853.0	29
73.700.1253.0	31
73.700.1553.0	64
73.700.2553.0	64
73.700.4058.0	66
73.700.6458.0	66
73.710.0553.0	30
73.710.0753.0	29
73.710.0853.0	29
73.710.1253.0	31
73.710.1553.0	64
73.710.2553.0	64
73.710.4058.0	66
73.710.6458.0	66
73.800.0853.0	60
73.800.2453.0	60
73.800.4253.0	60
73.800.7253.0	60
73.810.0853.0	60
73.810.2453.0	60
73.810.4253.0	60
73.810.7253.0	60
75.012.0053.0	111
75.012.5053.0	111
75.013.0051.0	110
75.013.0051.2	110
75.013.5051.0	110
76.320.0729.0	115
76.320.0753.0	115
76.320.1528.0	212
76.320.2528.0	216
76.321.0729.0	115
76.321.0753.0	115
76.322.0736.0	115
76.322.0736.1	115
76.322.0760.5	115
76.325.2528.0	216
76.326.4028.0	68
76.326.6428.0	68
76.327.4028.0	68
76.327.6428.0	68
76.330.1035.0	132
76.330.1035.1	132
76.330.1535.0	212
76.330.1535.1	212
76.330.2535.0	216
76.330.2535.1	216
76.330.4035.0	150
76.330.4035.1	150
76.331.1035.0	132
76.331.1035.1	132
76.331.1535.0	212
76.331.1535.1	212
76.331.2535.0	216
76.331.2535.1	216
76.331.4035.0	150
76.331.4035.1	150
76.332.1535.0	212
76.332.1535.1	212
76.333.4035.0	150
76.333.4035.1	150
76.334.1035.0	132
76.334.1035.1	132
76.334.1535.0	212
76.334.1535.1	212
76.334.2535.0	216
76.334.2535.1	216
76.334.4035.0	150
76.334.4035.1	150
76.334.6435.0	170
76.334.6435.1	170
76.335.1035.0	132
76.335.1035.1	132
76.335.1535.0	212
76.335.1535.1	212
76.335.2535.0	216
76.335.2535.1	216
76.335.4035.0	150
76.335.4035.1	150
76.335.6435.0	170
76.335.6435.1	170
76.336.1535.0	212
76.336.1535.1	212
76.337.4035.0	150
76.337.4035.1	150
76.337.6435.0	170
76.337.6435.1	170
76.338.6435.1	170
76.339.6435.1	170
76.340.1035.0	132
76.340.1035.1	132
76.340.4035.0	150
76.340.4035.1	150
76.341.1035.0	132
76.341.1035.1	132
76.341.4035.0	150
76.341.4035.1	150
76.342.1035.0	132
76.342.1035.1	132
76.342.4035.0	150
76.342.4035.1	150
76.343.4035.0	150
76.343.4035.1	150
76.344.1035.0	132
76.344.1035.1	132
76.344.4035.0	150
76.344.4035.1	150
76.344.6435.0	170
76.344.6435.1	170
76.345.1035.0	132
76.345.1035.1	132
76.345.4035.0	150

Index

Part number | page

76.345.4035.1	150
76.345.6435.0	170
76.345.6435.1	170
76.346.1035.0	132
76.346.1035.1	132
76.346.4035.0	150
76.346.4035.1	150
76.346.6435.0	170
76.346.6435.1	170
76.347.4035.0	150
76.347.4035.1	150
76.347.6435.0	170
76.347.6435.1	170
76.350.1035.0	128
76.350.1035.1	128
76.350.2535.0	214
76.350.2535.2	214
76.350.6435.0	166
76.350.6435.1	166
76.352.1035.0	128
76.352.1035.1	128
76.352.2535.0	214
76.352.2535.0	214
76.352.2535.1	214
76.352.2535.1	214
76.352.6435.0	166
76.352.6435.1	166
76.353.1035.0	128
76.353.1035.1	128
76.353.2535.0	214
76.353.2535.2	214
76.353.6435.0	166
76.353.6435.1	166
76.354.1035.0	128
76.354.1035.1	128
76.354.2535.0	214
76.354.2535.0	214
76.354.2535.1	214
76.354.6435.0	166
76.354.6435.1	166
76.360.6435.1	166
76.362.6435.1	166
76.372.2535.0	214
76.372.2535.1	214
76.374.2535.0	214
76.422.0736.1	117
76.425.1528.0	212
76.425.2528.0	216
76.440.1535.0	212
76.440.1535.1	212
76.440.2535.0	216
76.440.2535.1	216
76.441.1535.0	212
76.441.1535.1	212
76.441.2535.0	216
76.441.2535.1	216
76.442.1535.0	212
76.442.1535.1	212
76.442.2535.0	216
76.442.2535.1	216
76.444.1535.0	212
76.444.1535.1	212
76.444.2535.0	216
76.444.2535.1	216
76.445.1535.0	212
76.445.1535.1	212
76.445.2535.0	216
76.445.2535.1	216
76.446.1535.0	212
76.446.1535.1	212
76.446.2535.0	216
76.446.2535.1	216
76.452.0736.1	116
76.454.0736.1	116
78.000.0653.0	106
78.000.1053.0	106
78.000.1653.0	106
78.000.2453.0	106
78.001.2053.0	94
78.002.1053.1	93
78.003.0253.0	97
78.003.0453.0	91
78.003.0553.0	92
78.004.0253.0	99
78.004.0353.0	90
78.006.0253.0	100
78.010.0653.0	106
78.010.1053.0	106
78.010.1653.0	106
78.010.2453.0	106
78.011.2053.0	94
78.012.1053.1	93
78.013.0253.0	97
78.013.0453.0	91
78.013.0553.0	92
78.014.0253.0	99
78.014.0353.0	90
78.016.0253.0	100
78.101.0453.0	102
78.106.0153.0	98
78.106.0253.0	98
78.111.0453.0	102
78.116.0153.0	98
78.116.0253.0	98
78.181.0453.0	102
78.191.0453.0	102
78.203.0453.0	101
78.213.0453.0	101
78.320.0134.0	108
78.330.0134.0	108
78.352.0134.1	108
78.352.0134.5	108
78.353.0134.1	108
78.353.0134.5	108
78.362.0134.1	108
78.362.0134.5	108
78.363.0134.1	108
78.363.0134.5	108
78.903.0153.0	96
78.903.0253.0	96
78.904.0153.0	96
78.904.0253.0	96
78.913.0153.0	96
78.913.0253.0	96
78.914.0153.0	96
78.914.0253.0	96
78.920.0453.0	103
78.930.0453.0	103
95.000.1000.0	99
95.000.1000.0	100
95.101.0800.0	29
95.101.0800.0	30
95.101.0800.0	31
95.101.0800.0	40
95.101.0800.0	42
95.101.0800.0	56
95.101.0800.0	60
95.101.0800.0	64
95.101.0800.0	66
95.101.0800.0	77
95.101.0800.0	78
95.101.0800.0	80
95.101.0800.0	82
95.101.0800.0	90
95.101.0800.0	91
95.101.0800.0	92
95.101.0800.0	93
95.101.0800.0	94
95.101.0800.0	97
95.101.0800.0	99
95.101.0800.0	100
95.101.0800.0	103
95.101.0800.0	104
95.101.0800.0	111
95.101.0800.0	266
95.101.2000.0	31
95.101.2000.0	93
95.101.2000.0	103
95.101.2100.0	94
95.101.2100.0	266
95.101.2200.0	94
95.101.2200.0	266
95.350.0100.0	266
99.000.0920.8	267
99.000.0920.8	267
99.700.0000.6	245
99.700.3329.7	226
99.701.0000.6	245
99.702.0000.6	245
99.702.3329.7	234
99.703.0000.6	245
99.704.3329.7	238
99.706.0000.6	245
99.706.3329.7	230
99.707.0000.6	245
99.708.0000.6	245
99.709.0000.6	245
99.731.3329.7	224
99.732.3329.7	224
99.733.3329.7	228
99.734.3329.7	228
99.735.3329.7	232
99.736.3329.7	232
99.737.3329.7	236

99.738.3329.7	236
99.741.3329.7	224
99.742.3329.7	224
99.743.3329.7	228
99.744.3329.7	228
99.745.3329.7	232
99.746.3329.7	232
99.747.3329.7	236
99.748.3329.7	236
Z4.242.3753.0	267
Z4.242.4053.0	267
Z5.503.7221.0	108
Z5.503.7221.0	190
Z5.503.7221.0	258
Z5.503.7321.0	108
Z5.503.7321.0	190
Z5.503.7321.0	258
Z5.503.7421.0	190
Z5.503.7421.0	258
Z5.505.7121.0	108
Z5.505.7121.0	116
Z5.505.7221.0	108
Z5.505.7221.0	116
Z5.507.1321.0	108
Z5.507.1321.0	116
Z5.507.1321.0	118
Z5.507.1321.0	120
Z5.507.1321.0	122
Z5.507.1321.0	126
Z5.507.1321.0	128
Z5.507.1321.0	130
Z5.507.1321.0	134
Z5.507.1321.0	136
Z5.507.1321.0	138
Z5.507.1321.0	140
Z5.507.1321.0	194
Z5.507.1321.0	196
Z5.507.1321.0	198
Z5.507.1321.0	200
Z5.507.1321.0	210
Z5.507.1321.0	212
Z5.507.1321.0	214
Z5.507.1321.0	216
Z5.507.1321.0	258
Z5.507.1353.0	118
Z5.507.1353.0	120
Z5.507.1353.0	122
Z5.507.1353.0	126
Z5.507.1353.0	128
Z5.507.1353.0	130
Z5.507.1353.0	134
Z5.507.1353.0	136
Z5.507.1353.0	138
Z5.507.1353.0	140
Z5.507.1353.0	210
Z5.507.1353.0	212
Z5.507.1353.0	214
Z5.507.1353.0	216
Z5.507.1353.0	258
Z5.507.1453.1	110
Z5.507.1521.0	108
Z5.507.1521.0	116
Z5.507.1521.0	118
Z5.507.1521.0	120
Z5.507.1521.0	120
Z5.507.1521.0	122
Z5.507.1521.0	124
Z5.507.1521.0	126
Z5.507.1521.0	128
Z5.507.1521.0	130
Z5.507.1521.0	132
Z5.507.1521.0	134
Z5.507.1521.0	136
Z5.507.1521.0	138
Z5.507.1521.0	140
Z5.507.1521.0	142
Z5.507.1521.0	146
Z5.507.1521.0	148
Z5.507.1521.0	150
Z5.507.1521.0	152
Z5.507.1521.0	154
Z5.507.1521.0	156
Z5.507.1521.0	158
Z5.507.1521.0	160
Z5.507.1521.0	163
Z5.507.1521.0	164
Z5.507.1521.0	166
Z5.507.1521.0	168
Z5.507.1521.0	170
Z5.507.1521.0	172
Z5.507.1521.0	174
Z5.507.1521.0	176
Z5.507.1521.0	178
Z5.507.1521.0	180
Z5.507.1521.0	182
Z5.507.1521.0	194
Z5.507.1521.0	204
Z5.507.1521.0	206
Z5.507.1521.0	208
Z5.507.1521.0	210
Z5.507.1521.0	212
Z5.507.1521.0	214
Z5.507.1521.0	216
Z5.507.1521.0	218
Z5.507.1521.0	220
Z5.507.1521.0	222
Z5.507.1521.0	258
Z5.507.1553.0	118
Z5.507.1553.0	120
Z5.507.1553.0	120
Z5.507.1553.0	122
Z5.507.1553.0	124
Z5.507.1553.0	126
Z5.507.1553.0	128
Z5.507.1553.0	130
Z5.507.1553.0	132
Z5.507.1553.0	134
Z5.507.1553.0	136
Z5.507.1553.0	138
Z5.507.1553.0	140
Z5.507.1553.0	142
Z5.507.1553.0	146
Z5.507.1553.0	148
Z5.507.1553.0	150
Z5.507.1553.0	152
Z5.507.1553.0	154
Z5.507.1553.0	156
Z5.507.1553.0	158
Z5.507.1553.0	160
Z5.507.1553.0	163
Z5.507.1553.0	164
Z5.507.1553.0	166
Z5.507.1553.0	168
Z5.507.1553.0	170
Z5.507.1553.0	172
Z5.507.1553.0	174
Z5.507.1553.0	176
Z5.507.1553.0	178
Z5.507.1553.0	180
Z5.507.1553.0	182
Z5.507.1553.0	210
Z5.507.1553.0	212
Z5.507.1553.0	214
Z5.507.1553.0	216
Z5.507.1553.0	218
Z5.507.1553.0	220
Z5.507.1553.0	222
Z5.507.1553.0	258
Z5.507.1553.1	110
Z5.507.1721.0	120
Z5.507.1721.0	120
Z5.507.1721.0	124
Z5.507.1721.0	128
Z5.507.1721.0	132
Z5.507.1721.0	138
Z5.507.1721.0	142
Z5.507.1721.0	146
Z5.507.1721.0	150
Z5.507.1721.0	152
Z5.507.1721.0	154
Z5.507.1721.0	156
Z5.507.1721.0	158
Z5.507.1721.0	163
Z5.507.1721.0	164
Z5.507.1721.0	166
Z5.507.1721.0	170
Z5.507.1721.0	172
Z5.507.1721.0	174
Z5.507.1721.0	176
Z5.507.1721.0	178
Z5.507.1721.0	182
Z5.507.1721.0	184
Z5.507.1721.0	186
Z5.507.1721.0	188
Z5.507.1721.0	218
Z5.507.1721.0	220
Z5.507.1721.0	222
Z5.507.1721.0	258
Z5.507.1753.0	120
Z5.507.1753.0	120
Z5.507.1753.0	124
Z5.507.1753.0	128
Z5.507.1753.0	132
Z5.507.1753.0	138

Index

Z5.507.1753.0	142
Z5.507.1753.0	146
Z5.507.1753.0	150
Z5.507.1753.0	152
Z5.507.1753.0	154
Z5.507.1753.0	156
Z5.507.1753.0	158
Z5.507.1753.0	163
Z5.507.1753.0	164
Z5.507.1753.0	166
Z5.507.1753.0	170
Z5.507.1753.0	172
Z5.507.1753.0	174
Z5.507.1753.0	176
Z5.507.1753.0	178
Z5.507.1753.0	182
Z5.507.1753.0	184
Z5.507.1753.0	186
Z5.507.1753.0	188
Z5.507.1753.0	218
Z5.507.1753.0	220
Z5.507.1753.0	222
Z5.507.1753.0	258
Z5.507.1921.0	146
Z5.507.1921.0	156
Z5.507.1921.0	159
Z5.507.1921.0	163
Z5.507.1921.0	166
Z5.507.1921.0	170
Z5.507.1921.0	176
Z5.507.1921.0	178
Z5.507.1921.0	182
Z5.507.1921.0	184
Z5.507.1921.0	186
Z5.507.1921.0	188
Z5.507.1921.0	258
Z5.507.1953.0	146
Z5.507.1953.0	156
Z5.507.1953.0	159
Z5.507.1953.0	163
Z5.507.1953.0	166
Z5.507.1953.0	170
Z5.507.1953.0	176
Z5.507.1953.0	178
Z5.507.1953.0	182
Z5.507.1953.0	184
Z5.507.1953.0	186
Z5.507.1953.0	188
Z5.507.1953.0	258
Z5.507.2121.0	259
Z5.507.2221.0	259
Z5.507.2321.0	259
Z5.507.2421.0	259
Z5.507.5821.0	259
Z5.507.6021.0	259
Z5.507.6221.0	259
Z5.507.6421.0	259
Z5.507.9521.0	259
Z5.507.9621.0	118
Z5.507.9621.0	120
Z5.507.9621.0	126
Z5.507.9621.0	128
Z5.507.9621.0	134
Z5.507.9621.0	136
Z5.507.9621.0	138
Z5.507.9621.0	259
Z5.507.9721.0	118
Z5.507.9721.0	120
Z5.507.9721.0	126
Z5.507.9721.0	128
Z5.507.9721.0	134
Z5.507.9721.0	136
Z5.507.9721.0	138
Z5.507.9721.0	146
Z5.507.9721.0	152
Z5.507.9721.0	154
Z5.507.9721.0	156
Z5.507.9721.0	158
Z5.507.9721.0	164
Z5.507.9721.0	166
Z5.507.9721.0	172
Z5.507.9721.0	174
Z5.507.9721.0	176
Z5.507.9721.0	178
Z5.507.9721.0	259
Z5.507.9821.0	120
Z5.507.9821.0	128
Z5.507.9821.0	138
Z5.507.9821.0	146
Z5.507.9821.0	152
Z5.507.9821.0	154
Z5.507.9821.0	156
Z5.507.9821.0	158
Z5.507.9821.0	164
Z5.507.9821.0	166
Z5.507.9821.0	172
Z5.507.9821.0	174
Z5.507.9821.0	176
Z5.507.9821.0	178
Z5.507.9821.0	259
Z5.553.2921.0	38
Z5.560.1019.0	257
Z5.560.1119.0	257
Z5.560.1219.0	257
Z5.560.1319.0	257
Z5.574.0053.0	248
Z5.574.0153.0	248
Z5.574.0653.0	248
Z5.574.1053.0	248
Z5.574.1253.0	248
Z5.574.1653.0	248
Z5.574.2453.0	248
Z7.256.0227.0	266
Z7.256.0327.0	266
Z7.256.0627.0	266
Z7.256.0827.0	266
Z7.256.1227.0	266
Z7.280.4227.0	31
Z7.280.4327.0	31
Z7.409.7056.0	265
Z7.409.7156.0	265
Z7.409.7256.0	265
Z7.409.7356.0	265
Z7.409.8756.0	262
Z7.409.8856.0	262
Z7.409.8956.0	262
Z7.416.1556.0	262
Z7.416.1656.0	262
Z7.416.1756.0	262
Z7.416.1856.0	262
Z7.419.6128.0	264
Z7.419.6228.0	264
Z7.427.8053.0	262
Z7.427.8153.0	262
Z7.427.8253.0	262
Z7.427.8353.0	262
Z7.428.1110.0	263
Z7.428.1119.0	263
Z7.428.1153.0	263
Z7.428.1210.0	263
Z7.428.1219.0	263
Z7.428.1253.0	263
Z7.428.1310.0	263
Z7.428.1319.0	263
Z7.428.1353.0	263
Z7.428.1410.0	263
Z7.428.1419.0	263
Z7.428.1453.0	263
Z7.428.1653.0	263
Z7.428.1753.0	263
Z7.428.1853.0	263
Z7.428.5553.0	263
Z7.428.5653.0	263
Z7.428.5753.0	263
Z7.429.0153.0	262
Z7.429.0253.0	262
Z7.429.0353.0	262
Z7.429.0453.0	262
Z7.429.0553.0	262
Z7.429.0653.0	262
Z7.429.0753.0	262
Z7.432.6136.0	117
Z7.432.6236.0	117

YOUR **CONTACT PARTNERS.**

INDUSTRIAL AUTOMATION, ELECTROMECHANICS

Phone: **+49 951 9324-991**
Mail: **AT.TS@wieland-electric.com**

BUILDING AND INSTALLATION TECHNOLOGY

Phone: **+49 951 9324-996**
Mail: **BIT.TS@wieland-electric.com**

INDUSTRIAL AUTOMATION, ELECTRONICS

Phone: **+49 951 9324-995**
Mail: **AT.TS@wieland-electric.com**

SAFETY TECHNOLOGY

Phone: **+49 951 9324-999**
Mail: **safety@wieland-electric.com**

WIELAND ON YOUTUBE
FIND OUT MORE ABOUT OUR PRODUCTS

OUR **SUBSIDIARIES**
AND OUR SALES PARTNER

Contact your local partner:
www.wieland-electric.com

ONLY **ONE TIP** AWAY.

Scan QR code – view products in the E-SHOP.

OUR WIELAND E-SHOP
EVERY PRODUCT - ANY TIME

In our online store you will find all the information about our products, prices, and technical data. Order easily and conveniently online, and check availability.

https://eshop.wieland-electric.com

wieland

HEADQUARTERS

Wieland Electric GmbH
Brennerstraße 10 – 14
96052 Bamberg · Germany

Phone +49 951 9324-0
Fax +49 951 9324-198
info@wieland-electric.com

0530.1 K 08/19

Represented in over 70 countries worldwide:

www.**wieland**-electric.com